Gear Unit

H.SH, H.VH, H.HH, H.DH, H.KH, H.FH, H.HM, H.DM, H.KM, H.FM, H.PH, B.SH, B.VH, B.HH, B.DH, B.KH, B.FH, B.HM, B.DM, B.KM, B.FM, T.SH, T.HH, T.KH, T.DH, T.FH
Sizes 1 to 22

Assembly and operating instructions
BA 5010 EN 06/2010

FLENDER gear units

SIEMENS

SIEMENS

Gear Unit

H.SH, H.VH, H.HH, H.DH, H.KH, H.FH, H.HM, H.DM, H.KM, H.FM, H.PH, B.SH, B.VH, B.HH, B.DH, B.KH, B.FH, B.HM, B.DM, B.KM, B.FM, T.SH, T.HH, T.KH, T.DH, T.FH
Sizes 1 to 22

Assembly and operating instructions

Translation of the original assembly and operating instructions

Notes and symbols in these assembly and operating instructions

Note: The term "Assembly and operating instructions" will in the following also be shortened to "instructions" or "manual".

Legal notes

Warning note concept

This manual comprises notes which must be observed for your personal safety and for preventing material damage. Notes for your personal safety are marked with a warning triangle or an "Ex" symbol (when applying Directive 94/9/EC), those only for preventing material damage with a "STOP" sign.

WARNING! Imminent **explosion!**

The notes indicated by this symbol are given to prevent **explosion damage.**
Disregarding these notes may result in serious injury or death.

WARNING! Imminent **personal injury!**

The notes indicated by this symbol are given to prevent **personal injury.**
Disregarding these notes may result in serious injury or death.

WARNING! Imminent **damage to the product!**

The notes indicated by this symbol are given to prevent **damage to the product.**
Disregarding these notes may result in material damage.

NOTE!

The notes indicated by this symbol must be treated as general **operating information**.
Disregarding these notes may result in undesirable results or conditions.

WARNING! Hot surfaces!

The notes indicated by this symbol are made to prevent **risk of burns due to hot surfaces** and must always be observed.
Disregarding these notes may result in light or serious injury.

Where there is more than one hazard, the warning note for whichever hazard is the most serious is always used. If in a warning note a warning triangle is used to warn of possible personal injury, a warning of material damage may be added to the same warning note.

Qualified personnel

The product or system to which these instructions relate may be handled only by persons qualified for the work concerned and in accordance with the instructions relating to the work concerned, particularly the safety and warning notes contained in those instructions. Qualified personnel must be specially trained and have the experience necessary to recognise risks associated with these products or systems and to avoid possible hazards.

Intended use of Siemens products

Observe also the following:

Siemens products must be used only for the applications provided for in the catalogue and the relevant technical documentation. If products and components of other makes are used, they must be recommended or approved by Siemens. The faultfree, safe operation of the products calls for proper transport, proper storage, erection, assembly, installation, start-up, operation and maintenance. The permissible ambient conditions must be adhered to. Notes in the relevant documentations must be observed.

Trademarks

All designations indicated with the registered industrial property mark ® are registered trademarks of Siemens AG. Other designations used in these instructions may be trademarks the use of which by third parties for their own purposes may infringe holders' rights.

Exclusion of liability

We have checked the content of the instructions for compliance with the hard- and software described. Nevertheless, variances may occur, and so we can offer no warranty for complete agreement. The information given in these instructions is regularly checked, and any necessary corrections are included in subsequent editions.

Symbols

Earth connection point			Air relief point		yellow
Oil-filling point		yellow	Oil-draining point		white
Oil level		red	Oil level		red
Oil overflow			Connection for vibration-monitoring device		
Lubrication point		red	Apply grease		
Lifting eye			Eye bolt		
Do not unscrew					
Alignment surface, horizontal			Alignment surface, vertical		

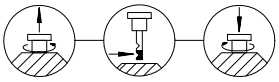

These symbols indicate the oil-level checking procedure using the oil dipstick.

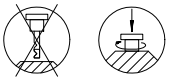

These symbols indicate that the oil dipstick must always be firmly screwed in.

Contents

1. Technical data

1.1 General technical data

The most important technical data are shown on the rating plate. These data and the contractual agreements between Siemens and the customer for the gear unit determine the limits of its correct use.

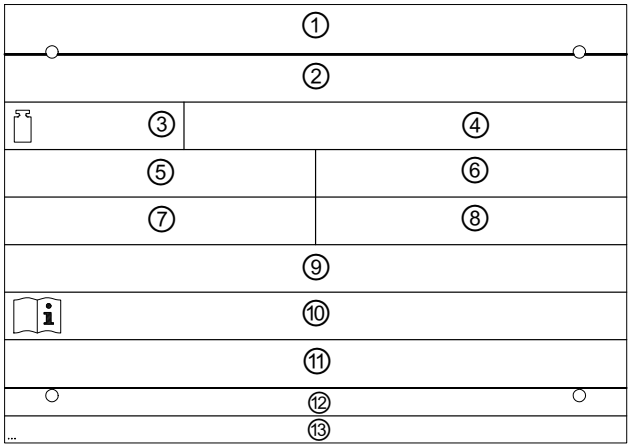

Fig. 1: Rating plate gear unit

① Company logo

② Order number, item, sequence number, year built

③ Total weight in kg

④ Special information

⑤ Type, size *)

⑥ Power rating P_2 in kW or torque T_2 in Nm

⑦ Speed n_1

⑧ Speed n_2

⑨ Oil data (oil type, oil viscosity, oil quantity)

⑩ Instructions number(s)

⑪ Special information

⑫ Manufacturer and place of manufacture

⑬ Country of origin

*) Example

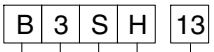

Size . . . . . 1 ... 22

Installation . . . . . H = Horizontal
M = Horizontal design without base (from size 13)

Type of output shaft . . . . . S = Solid shaft
V = Solid shaft, reinforced
H = Hollow shaft with parallel keyway
D = Hollow shaft for shrink disk
K = Hollow shaft with internal spline to DIN 5480
F = Flanged shaft
P = Design paper-processing machine

Number of stages . . . . . 1, 2, 3 or 4

Gear-unit type . . . . . H = Helical gear unit
B = Bevel-helical gear unit (2, 3 or 4 stages only)
T = Bevel-helical gear unit with split housing (sizes 4 to 12)

Data on weights and measuring-surface sound-pressure levels of the various gear types are given in items 1.2.2 and/or 1.2.3.

For further technical data, refer to the drawings in the gear-unit documentation.

1.2 Configurations and weights

1.2.1 Types

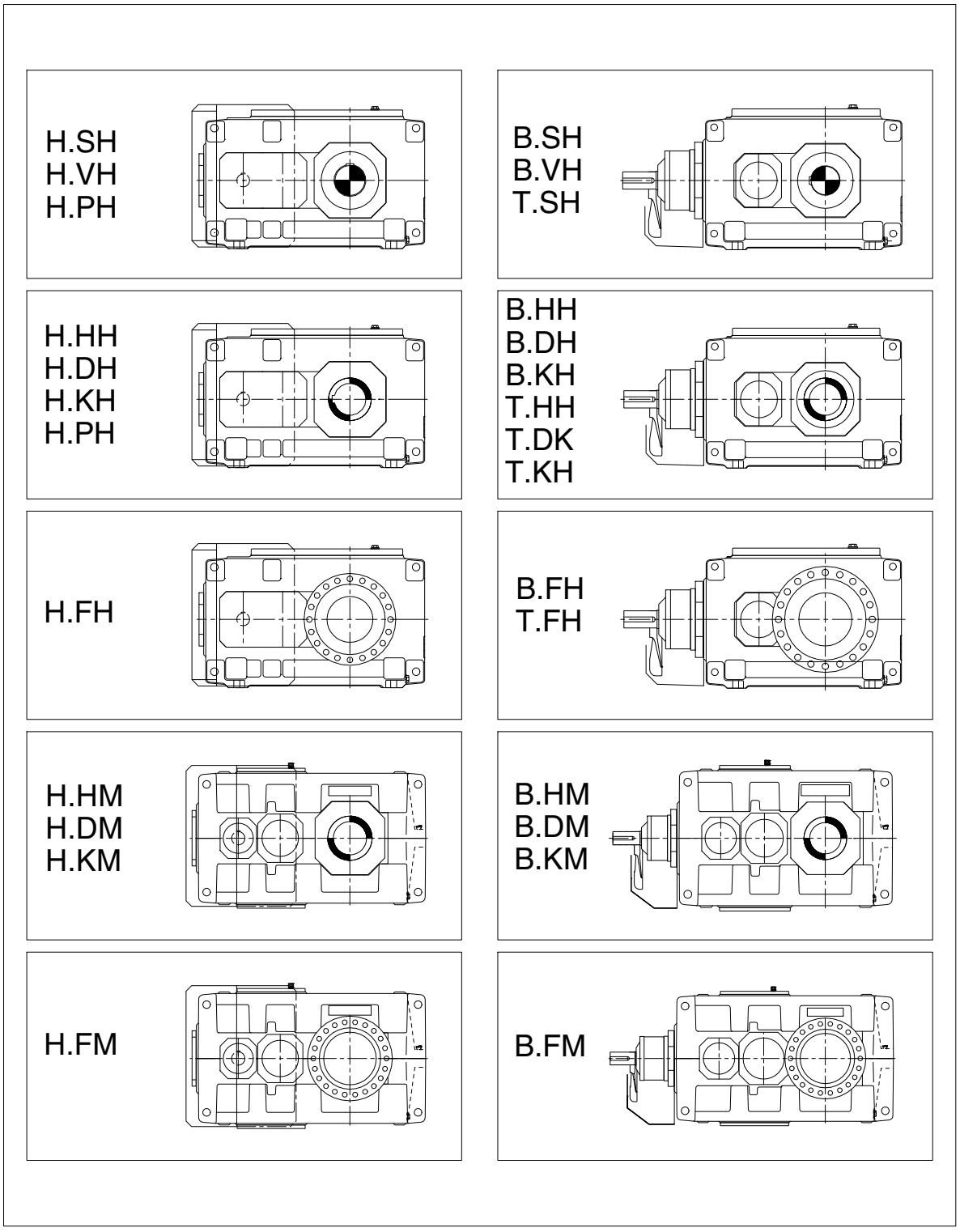

1.2.2 Weights

Table 1: Weights (approximate values)

Type	Approx. weight (kg) for size											
	1	**2**	**3**	**4**	**5**	**6**	**7**	**8**	**9**	**10**	**11**	**12**
H1SH	55	-	128	-	302	-	547	-	862	-	1515	-
H2PH	-	-	-	-	340	-	550	-	860	-	1360	-
H2.H	-	-	115	190	300	355	505	590	830	960	1335	1615
H2.M	-	-	-	-	-	-	-	-	-	-	-	-
H3.H	-	-	-	-	320	365	540	625	875	1020	1400	1675
H3.M	-	-	-	-	-	-	-	-	-	-	-	-
H4.H	-	-	-	-	-	-	550	645	875	1010	1460	1725
H4.M	-	-	-	-	-	-	-	-	-	-	-	-
B2.H	50	82	140	235	360	410	615	700	1000	1155	1640	1910
B2.M	-	-	-	-	-	-	-	-	-	-	-	-
B3.H	-	-	130	210	325	380	550	635	890	1020	1455	1730
B3.M	-	-	-	-	-	-	-	-	-	-	-	-
B4.H	-	-	-	-	335	385	555	655	890	1025	1485	1750
B4.M	-	-	-	-	-	-	-	-	-	-	-	-

Type	Approx. weight (kg) for size									
	13	**14**	**15**	**16**	**17**	**18**	**19**	**20**	**21**	**22**
H1SH	2395	-	3200	-	4250	-	5800	-	-	-
H2PH	-	-	-	-	-	-	-	-	-	-
H2.H	2000	2570	3430	3655	4650	5125	6600	7500	8900	9600
H2.M	1880	2430	3240	3465	4420	4870	6300	7200	8400	9200
H3.H	2295	2625	3475	3875	4560	5030	6700	8100	9100	9800
H3.M	2155	2490	3260	3625	4250	4740	6200	7600	8500	9300
H4.H	2390	2730	3635	3965	4680	5185	6800	8200	9200	9900
H4.M	2270	2600	3440	3740	4445	4915	6300	7700	8600	9400
B2.H	2450	2825	3990	4345	5620	6150	-	-	-	-
B2.M	2350	2725	3795	4160	5320	5860	-	-	-	-
B3.H	2380	2750	3730	3955	4990	5495	7000	8100	9200	9900
B3.M	2260	2615	3540	3765	4760	5240	6500	7600	8600	9400
B4.H	2395	2735	3630	3985	4695	5200	6800	8200	9200	9900
B4.M	2280	2605	3435	3765	4460	4930	6300	7700	8600	9400

☞ All weights are for units without oil filling and add-on parts. For the exact weights, refer to the drawings in the gear-unit documentation.

Table 2: Total weights (approximate values) for gear units including auxiliary drive (maintenance drive)

Type	Approx. weight (kg) for size								
	4	**5**	**6**	**7**	**8**	**9**	**10**	**11**	**12**
T3.H	262	377	427	630	710	1015	1135	1595	1860
B3.H	272	392	447	655	740	1055	1185	1665	1940

Type	Approx. weight (kg) for size									
	13	**14**	**15**	**16**	**17**	**18**	**19**	**20**	**21**	**22**
B3.H	2700	3070	4110	4335	5370	5875	6740	7450	9080	9840

Table 3: Weights (approximate values) for gear units including auxiliary drive (load drive)

Type	Approx. weight (kg) for size								
	4	**5**	**6**	**7**	**8**	**9**	**10**	**11**	**12**
T3.H	285	432	482	670	750	1090	1210	1775	2040
B3.H	295	447	502	695	780	1130	1260	1845	2120

Type	Approx. weight (kg) for size									
	13	**14**	**15**	**16**	**17**	**18**	**19**	**20**	**21**	**22**
B3.H	2930	3300	4450	4675	5920	6425	7100	8000	9730	10490

☞ All weights are for units without oil charge, however with fitted auxiliary drive, including motor of the auxiliary drive.
For the exact weights, refer to the drawings in the gear-unit documentation.

1.2.3 Measuring-surface sound-pressure level

The gear unit has a measuring-surface sound-pressure level at a distance of 1 m, which can be found in tables 4 to 7.

The measurement is carried out to DIN EN ISO 9614 Part 2, using the sound-intensity method.

The workplace of the operating personnel is defined as the area on the measuring-surface at a distance of 1 metre in the vicinity of which persons may be present.

The sound-pressure level applies to the warmed-up gear unit at input speed n_1 and output power P_2 stated on the rating plate, as measurement obtained on the Siemens test bench. If several figures are given, the highest speed and power values apply.

The measuring-surface sound-pressure level includes add-on lubrication units, if applicable. With outgoing and incoming pipes, the interfaces are the flanges.

The sound-pressure levels stated in the table were obtained by statistical calculation by our Quality Control Dept. The gear unit can be statistically expected to comply with these sound-pressure levels.

1.2.3.1 Measuring-surface sound-pressure level for bevel-helical gear units (B...) with fan

Table 4: Measuring-surface sound-pressure level L_{pA} in dB(A) for bevel-helical gear units with fan

Type	i_N	n_1 1/min	Gear-unit size																					
			1	**2**	**3**	**4**	**5**	**6**	**7**	**8**	**9**	**10**	**11**	**12**	**13**	**14**	**15**	**16**	**17**	**18**	**19**	**20**	**21**	**22**
B2	5	1500	71	72	73	76	79	81	83	84	85	87	88	89	91	92	94	-	-	-	-	-	-	-
	.	1000	66	66	67	71	73	74	77	78	79	80	82	83	84	85	87	89	90	-	-	-	-	-
	8	750	1)	60	61	64	66	67	70	71	72	73	75	76	77	78	81	82	83	85	-	-	-	-
	9	1500	68	69	70	73	75	76	78	81	82	83	84	85	86	87	88	90	-	-	-	-	-	-
	.	1000	61	62	63	67	68	70	73	74	75	77	79	80	81	82	83	84	86	87	-	-	-	-
	14	750	1)	60	1)	61	62	64	66	67	68	70	72	73	74	75	77	78	79	80	-	-	-	-
	16	1500	65	66	67	71	74	76	78	79	80	81	83	84	87	88	89	90	-	-	-	-	-	-
	.	1000	1)	1)	60	64	67	68	70	72	73	74	78	79	80	81	82	83	84	84	-	-	-	-
	22.4	750	1)	1)	1)	1)	61	63	65	67	68	69	71	72	73	73	74	74	75	76	-	-	-	-
T3 B3	12.5	1500	-	-	69	72	75	77	79	80	81	82	83	85	88	89	90	91	93	93	93	93	95	95
	.	1000	-	-	62	65	68	69	71	72	73	74	77	78	80	82	83	83	84	85	86	86	88	88
	31.5	750	-	-	1)	1)	63	64	66	68	69	70	71	73	74	75	76	77	78	78	79	79	81	81
	35.5	1500	-	-	67	69	72	73	74	75	77	79	82	84	86	87	88	89	90	91	92	92	93	93
	.	1000	-	-	1)	63	65	66	67	69	71	72	73	75	77	78	79	80	81	82	83	84	85	86
	56	750	-	-	1)	1)	1)	1)	62	64	65	67	69	70	71	72	73	74	75	76	77	78	79	79
	63	1500	-	-	66	68	70	71	73	74	76	78	81	83	85	86	87	88	89	90	91	91	92	92
	.	1000	-	-	1)	61	63	64	66	68	69	71	73	75	77	78	79	80	81	81	82	82	83	84
	90	750	-	-	1)	1)	1)	1)	61	63	64	66	67	68	70	71	72	73	74	75	75	76	77	77

1) $L_{pA} < 60$ dB(A)

1.2.3.2 Measuring-surface sound-pressure level for bevel-helical gear units (B...) without fan

Table 5: Measuring-surface sound-pressure level L_{pA} in dB(A) for bevel-helical gear units without fan

Type	i_N	n_1 1/min	Gear-unit size																					
			1	**2**	**3**	**4**	**5**	**6**	**7**	**8**	**9**	**10**	**11**	**12**	**13**	**14**	**15**	**16**	**17**	**18**	**19**	**20**	**21**	**22**
B2	5	1500	70	71	72	75	78	80	82	83	84	86	87	88	89	90	93	-	-	-	-	-	-	-
	.	1000	64	65	66	70	72	73	76	77	78	79	81	82	83	84	86	88	89	-	-	-	-	-
	8	750	1)	1)	1)	63	65	66	69	71	72	73	74	75	77	78	80	82	83	84	-	-	-	-
	9	1500	65	66	67	71	74	75	77	79	80	81	83	84	85	86	87	89	-	-	-	-	-	-
	.	1000	59	60	61	65	67	69	72	73	74	76	77	78	80	81	82	83	85	86	-	-	-	-
	14	750	1)	1)	1)	1)	60	63	65	66	67	69	71	72	73	74	76	77	78	79	-	-	-	-
	16	1500	62	65	63	66	69	71	72	74	75	77	78	80	81	82	85	85	-	-	-	-	-	-
	.	1000	1)	1)	1)	61	63	65	67	68	69	71	72	74	75	77	79	80	81	81	-	-	-	-
	22.4	750	1)	1)	1)	1)	1)	1)	60	62	63	64	66	67	68	70	72	73	74	75	-	-	-	-
T3 B3	12.5	1500	-	-	65	68	71	74	75	76	77	79	81	83	84	85	86	87	87	88	89	90	91	92
	.	1000	-	-	1)	63	66	68	69	70	72	73	75	77	78	80	80	81	82	82	84	85	86	86
	31.5	750	-	-	1)	1)	1)	61	62	64	65	66	68	71	71	73	73	74	75	75	77	78	79	79
	35.5	1500	-	-	60	65	67	70	71	71	72	74	77	79	80	81	82	83	83	84	86	86	88	88
	.	1000	-	-	1)	1)	62	65	65	66	66	69	71	73	75	76	76	77	77	78	80	81	82	83
	56	750	-	-	1)	1)	1)	1)	1)	1)	1)	62	65	67	68	69	70	70	71	72	74	74	75	76
	63	1500	-	-	1)	61	64	70	67	68	68	70	73	75	76	78	78	79	79	80	82	83	84	84
	.	1000	-	-	1)	1)	1)	63	62	62	62	65	68	70	71	72	73	73	74	75	76	77	78	79
	90	750	-	-	1)	1)	1)	1)	1)	1)	1)	1)	61	63	64	65	66	67	67	68	70	70	72	72
B4	80	1500	-	-	-	-	64	65	67	68	70	72	75	76	77	79	80	81	82	83	84	85	86	86
	.	1000	-	-	-	-	1)	1)	61	63	64	67	69	70	72	73	74	75	76	77	78	79	80	80
	125	750	-	-	-	-	1)	1)	1)	1)	1)	1)	62	64	65	66	68	68	69	71	71	72	73	74
	140	1500	-	-	-	-	60	61	63	65	66	68	71	72	73	75	76	77	78	79	80	81	82	82
	.	1000	-	-	-	-	1)	1)	1)	1)	61	63	65	67	68	69	71	71	72	74	75	75	76	77
	224	750	-	-	-	-	1)	1)	1)	1)	1)	1)	1)	1)	61	62	64	65	66	67	68	69	69	70
	250	1500	-	-	-	-	1)	1)	1)	62	63	65	67	69	70	71	73	73	75	76	77	77	78	79
	.	1000	-	-	-	-	1)	1)	1)	1)	1)	1)	62	63	64	66	67	68	69	70	71	72	73	73
	400	750	-	-	-	-	1)	1)	1)	1)	1)	1)	1)	1)	1)	1)	1)	61	62	63	64	65	66	66

1) $L_{pA} < 60$ dB(A)

1.2.3.3 Measuring-surface sound-pressure level for helical-gear units (H...) with fan

Table 6: Measuring-surface sound-pressure level L_{pA} in dB(A) for helical-gear units with fan

Type	i_N	n_1 1/min	Gear-unit size																					
			1	**2**	**3**	**4**	**5**	**6**	**7**	**8**	**9**	**10**	**11**	**12**	**13**	**14**	**15**	**16**	**17**	**18**	**19**	**20**	**21**	**22**
H1	1.25	1500	-	-	76	-	81	-	84	-	87	-	91	-	-	-	-	-	-	-	-	-	-	-
	.	1000	-	-	71	-	76	-	79	-	81	-	83	-	85	-	-	-	-	-	-	-	-	-
	2	750	-	-	67	-	72	-	75	-	78	-	80	-	82	-	85	-	-	-	-	-	-	-
	2.24	1500	-	-	73	-	79	-	82	-	84	-	89	-	90	-	-	-	-	-	-	-	-	-
	.	1000	-	-	68	-	74	-	77	-	79	-	82	-	84	-	87	-	-	-	-	-	-	-
	3.55	750	-	-	64	-	70	-	72	-	75	-	78	-	80	-	83	-	84	-	-	-	-	-
	4	1500	-	-	70	-	77	-	81	-	83	-	86	-	89	-	93	-	-	-	-	-	-	-
	.	1000	-	-	65	-	71	-	75	-	77	-	80	-	82	-	84	-	85	-	87	-	-	-
	5.6	750	-	-	61	-	68	-	71	-	72	-	75	-	77	-	79	-	81	-	83	-	-	-
H2	6.3	1500	-	-	-	75	76	77	80	81	82	84	85	86	88	90	92	94	96	96	-	-	-	-
	.	1000	-	-	-	69	71	72	74	75	77	79	80	81	83	84	85	86	87	88	88	89	90	-
	10	750	-	-	-	66	68	69	70	72	73	75	76	77	79	80	81	82	83	83	84	84	85	85
	11.2	1500	-	-	-	73	75	77	79	80	81	82	85	88	90	91	92	93	95	95	-	-	-	-
	.	1000	-	-	-	68	69	70	72	73	75	77	79	80	82	83	84	85	85	86	86	87	87	87
	16	750	-	-	-	64	66	67	69	70	71	73	74	76	78	79	79	80	81	81	82	82	83	83
	18	1500	-	-	-	71	73	75	77	78	80	82	84	86	87	90	91	92	93	94	94	95	95	95
	.	1000	-	-	-	65	67	68	71	72	73	75	77	78	80	81	82	83	83	84	85	85	86	86
	28	750	-	-	-	62	64	65	67	68	69	71	73	74	75	77	78	79	79	80	80	81	81	81
H3	22.4	1500	-	-	-	-	71	72	75	75	77	77	80	80	81	81	84	84	84	85	-	-	-	-
	.	1000	-	-	-	-	65	66	69	70	71	72	74	75	75	75	78	78	78	79	-	-	-	-
	35.5	750	-	-	-	-	62	62	66	67	67	68	70	70	71	72	74	74	75	76	-	-	-	-
	40	1500	-	-	-	-	70	71	73	74	76	76	79	79	80	80	83	82	83	83	-	-	-	-
	.	1000	-	-	-	-	64	65	67	68	69	70	73	73	73	74	77	77	77	77	-	-	-	-
	63	750	-	-	-	-	62	62	63	64	65	66	69	69	69	70	72	73	73	73	-	-	-	-
	71	1500	-	-	-	-	70	70	72	72	75	75	78	78	78	78	82	82	82	82	-	-	-	-
	.	1000	-	-	-	-	64	64	65	66	68	69	71	72	72	72	75	75	75	76	-	-	-	-
	112	750	-	-	-	-	61	61	62	62	64	65	67	67	68	68	71	71	71	72	-	-	-	-

1.2.3.4 Measuring-surface sound-pressure level for helical-gear units (H...) without fan

Table 7: Measuring-surface sound-pressure level L_{pA} in dB(A) for helical-gear units without fan

Type	i_N	n_1 1/min	Gear-unit size																					
			1	**2**	**3**	**4**	**5**	**6**	**7**	**8**	**9**	**10**	**11**	**12**	**13**	**14**	**15**	**16**	**17**	**18**	**19**	**20**	**21**	**22**
	1.25	1500	75	-	73	-	77	-	79	-	81	-	83	-	-	-	-	-	-	-	-	-	-	-
	.	1000	70	-	69	-	72	-	75	-	76	-	78	-	80	-	-	-	-	-	-	-	-	-
	2	750	66	-	65	-	69	-	71	-	73	-	75	-	77	-	79	-	-	-	-	-	-	-
	2.24	1500	72	-	70	-	75	-	77	-	79	-	81	-	83	-	-	-	-	-	-	-	-	-
H1	.	1000	67	-	66	-	70	-	72	-	74	-	76	-	78	-	80	-	-	-	-	-	-	-
	3.55	750	63	-	62	-	67	-	68	-	71	-	73	-	75	-	77	-	79	-	-	-	-	-
	4	1500	69	-	67	-	72	-	74	-	76	-	78	-	79	-	82	-	-	-	-	-	-	-
	.	1000	64	-	1)	-	67	-	70	-	71	-	73	-	75	-	77	-	79	-	81	-	-	-
	5.6	750	60	-	1)	-	63	-	66	-	67	-	70	-	71	-	74	-	76	-	78	-	-	-
	6.3	1500	-	-	-	71	74	75	76	77	79	79	80	81	81	82	84	85	85	86	-	-	-	-
	.	1000	-	-	-	66	69	70	71	72	74	74	75	76	76	77	80	80	80	81	83	83	84	-
	10	750	-	-	-	63	66	67	67	69	70	71	72	73	73	74	76	77	77	78	80	80	81	81
	11.2	1500	-	-	-	69	72	73	74	75	77	77	78	79	79	80	82	83	83	84	-	-	-	-
H2	.	1000	-	-	-	64	67	68	69	70	72	72	73	74	74	75	77	78	78	79	81	81	82	82
	16	750	-	-	-	61	64	65	66	67	69	69	70	71	71	72	74	75	75	76	77	78	79	79
	18	1500	-	-	-	66	69	70	71	72	74	74	75	76	77	78	80	80	81	82	83	84	84	85
	.	1000	-	-	-	61	64	65	66	68	69	69	70	71	72	73	75	75	76	77	78	79	79	80
	28	750	-	-	-	1)	61	62	63	64	66	66	67	68	69	70	72	72	73	73	75	75	76	76
	22.4	1500	-	-	-	-	68	69	73	74	74	75	77	77	78	79	81	81	82	83	83	84	85	86
	.	1000	-	-	-	-	63	65	68	69	69	71	72	73	73	74	76	77	77	78	79	79	81	81
	31.5	750	-	-	-	-	60	61	65	66	65	67	69	69	70	71	73	73	74	75	75	76	77	78
	35.5	1500	-	-	-	-	65	67	70	71	71	73	74	75	76	76	78	79	79	80	81	81	83	83
H3	.	1000	-	-	-	-	1)	62	65	66	66	68	69	70	71	72	73	74	75	75	76	77	78	78
	63	750	-	-	-	-	1)	1)	62	63	63	65	66	67	67	68	70	71	71	72	73	73	75	75
	71	1500	-	-	-	-	62	64	67	68	68	70	71	72	73	74	76	76	77	78	78	79	80	81
	.	1000	-	-	-	-	1)	1)	62	63	63	65	66	67	68	69	71	71	72	73	73	74	75	76
	112	750	-	-	-	-	1)	1)	1)	1)	1)	62	63	64	65	66	68	68	69	70	70	71	72	72
	100	1500	-	-	-	-	-	-	66	67	68	69	70	71	72	73	75	75	76	76	77	78	78	78
	.	1000	-	-	-	-	-	-	62	63	63	64	65	66	67	68	70	70	71	72	72	73	73	74
	140	750	-	-	-	-	-	-	1)	1)	1)	61	62	63	64	64	66	67	68	68	69	69	70	70
	160	1500	-	-	-	-	-	-	64	65	66	66	68	68	69	70	72	73	73	74	74	75	75	76
H4	.	1000	-	-	-	-	-	-	1)	60	61	62	63	64	64	65	67	68	68	69	70	70	71	71
	250	750	-	-	-	-	-	-	1)	1)	1)	1)	60	61	61	62	64	64	65	66	66	67	67	68
	280	1500	-	-	-	-	-	-	61	62	63	64	65	66	67	67	69	70	70	71	72	72	73	73
	.	1000	-	-	-	-	-	-	1)	1)	1)	1)	60	61	62	63	64	65	66	66	67	68	68	68
	450	750	-	-	-	-	-	-	1)	1)	1)	1)	1)	1)	1)	1)	61	62	62	63	64	64	65	65

1) $L_{pA} < 60$ dB(A)

2. General notes

2.1 Introduction

These instructions are an integral part of the gear unit supplied and must be kept in its vicinity for reference at all times.

All persons carrying out work on the gear unit must have read and understood these instructions and must adhere to them. Siemens accepts no responsibility for damage or disruption caused by disregard of these instructions.

The **"FLENDER gear unit"** dealt with in these instructions has been developed for driving machines in general engineering applications. Possible applications for gear units of this series are the chemical, rubber, food processing, plastics and other industries.

The gear unit is designed only for the application specified in section 1, "Technical data". Other operating conditions must be contractually agreed.

The gear unit has been manufactured in accordance with the state of the art and is delivered in a condition for safe and reliable use.

The gear unit must be used and operated strictly in accordance with the conditions laid down in the contract governing performance and supply agreed by Siemens and the customer.

The gear unit described in these instructions reflects the state of technical development at the time these instructions went to print.

In the interest of technical progress we reserve the right to make changes to the individual assemblies and accessories which we regard as necessary to preserve their essential characteristics and improve their efficiency and safety.

2.2 Copyright

Technical enquiries should be addressed to the following works or to one of our customer services:

Siemens Industriegetriebe GmbH
Thierbacher Straße 24
09322 Penig

Tel.: +49 (0)37381 / 61-0
Fax: +49 (0)37381 / 80286

3. Safety instructions

Entry to the gear unit is not permitted during operation!
Entry for maintenance and repair work is only permitted when the gear unit is at a standstill!
Caution, risk of falling!

Any changes on the part of the user are not permitted. This applies equally to safety features designed to prevent accidental contact.

3.1 Obligations of the user

- The operator must ensure that everyone carrying out work on the gear unit has read and understood these instructions and is adhering to them in every point in order to:
  - avoid injury or damage,
  - ensure the safety and reliability of the unit,
  - avoid disruptions and environmental damage through incorrect use.
- During transport, assembly, installation, dismantling, operation and maintenance of the unit, the relevant safety and environmental regulations must be complied with at all times.
- The gear unit must be operated, maintained and/or repaired only by authorised, properly trained and qualified personnel.
- The outside of the gear unit must not be cleaned with high-pressure cleaning equipment.
- All work must be carried out with great care and with due regard to safety.

All work on the gear unit must be carried out only when it is not in operation.
The drive unit must be secured against being switched on accidentally (e.g. by locking the key switch or removing the fuses from the power supply). A notice should be attached to the start switch stating clearly that work is in progress.
At the same time the complete installation must be without load, so that no danger occurs during demounting operations (e.g. change of backstop).

- No electrical welding work must be done at all on the drive.
  The drives must not be used as an earthing point for welding operations. Toothed parts and bearings may be irreparably damaged by welding.
- A potential equalisation in accordance with the applying regulations and directives must be carried out! If no threaded holes for earth connection are available on the gear unit, other appropriate measures must be taken. This work must always be done by electrotechnical specialists.

If any inexplicable changes are noticed during operation of the gear unit, such as an important increase in temperature or unusual noises, the drive assembly must be switched off immediately.

Rotating and/or movable drive components must be fitted with suitable safeguards to prevent contact.

When the gear unit is incorporated in plant or machinery, the manufacturer of such plant or machinery must ensure that the contents of these instructions are incorporated in his own instructions.

- When removing the safety equipment the fixation means should be stored for later use. Removed safety equipment must be re-installed prior to starting up.
- Notices attached to the gear unit, e.g. rating plate, direction arrows etc., must always be observed. They must be kept free from dirt and paint at all times. Missing plates must be replaced.
- Screws which have been damaged during assembly or disassembly work must be replaced with new ones of the same strength class and type.
- Spare parts should always be obtained from Siemens (see also section 11).

3.2 Environmental protection

- Dispose of any packing material in accordance with regulations or separate it for recycling.
- When changing oil, the used oil must be collected in suitable containers. Any pools of oil which may have collected should be removed at once with an oil-binding agent.
- Preservative agents should be stored separately from used oil.
- Used oil, preservative agents, oil-binding agents and oil-soaked cloths must be disposed of in accordance with environmental legislation.
- Disposal of the gear unit after its useful life:
  - Drain all the operating oil, preservative agent and/or cooling agent from the gear unit and dispose of in accordance with regulations.
  - Depending on national regulations, gear-unit components and/or add-on parts may have to be disposed of or sent for recycling separately.

3.3 Special dangers and personal protective equipment

- Depending on operating conditions, the surface of the gear unit may heat up or cool down to extreme temperatures.

In the case of hot surfaces (> 55 °C) there is a risk of burns!

In the case of cold surfaces (< 0 °C) there is a risk of frost injury (pain, numbness, frostbite)!

During oil changes there is a risk of scalding from escaping oil!

Small foreign matter such as sand, dust, etc. can get into the cover plates of the rotating parts and be thrown back by these.
Risk of eye injury!

In addition to any generally prescribed personal safety equipment (such as safety shoes, safety clothing, helmet) handling the gear unit requires wearing **suitable safety gloves** and **suitable safety glasses**!

The gear unit is not suitable for operation in explosion hazard locations. It must under no circumstances be used in such locations because of the risk to life and limb.

4. Transport and storage

Observe the instructions in section 3., "Safety instructions"!

4.1 Scope of supply

The products supplied are listed in the despatch papers. Check immediately on receipt to ensure that all the products listed have actually been delivered. Parts damaged and/or missing parts must be reported to Siemens in writing immediately.

If there is any visible damage, the gear unit must not be put into operation.

4.2 Transport

When transporting Siemens products, use only lifting and handling equipment of sufficient load-bearing capacity!
Observe the notes regarding load distribution on the packing.

The gear unit is delivered in the fully assembled condition. Additional items are delivered separately packaged, if applicable.

Different forms of packaging may be used, depending on the size of the unit and method of transport. Unless otherwise agreed, the packaging complies with the **HPE Packaging Guidelines.**

The symbols marked on the packing must be observed at all times. These have the following meanings:

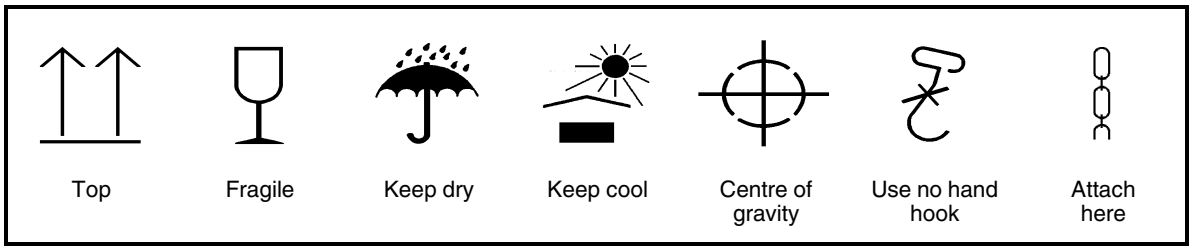

Fig. 2: Transport symbols

Transport of the gear unit must be carried out so as to avoid personal damage and damage to the gear unit.
If, for example, the free shaft ends are knocked, this may damage the gear unit.

The gear units must be transported with suitable equipment only.
During transport the gear unit should be left without oil filling.

Exception: In the case of gear units with auxiliary drive, the auxiliary gear unit will be delivered ex works with oil filling.

Use only the eyes provided to attach lifting equipment to the unit.
Handling of the gear unit by attaching it to the piping is not permitted.
The pipework must not be damaged.
Do not use the front threads at the shaft ends to attach slinging equipment for the transport.
Slinging equipment must be adequate for the weight of the gear unit.

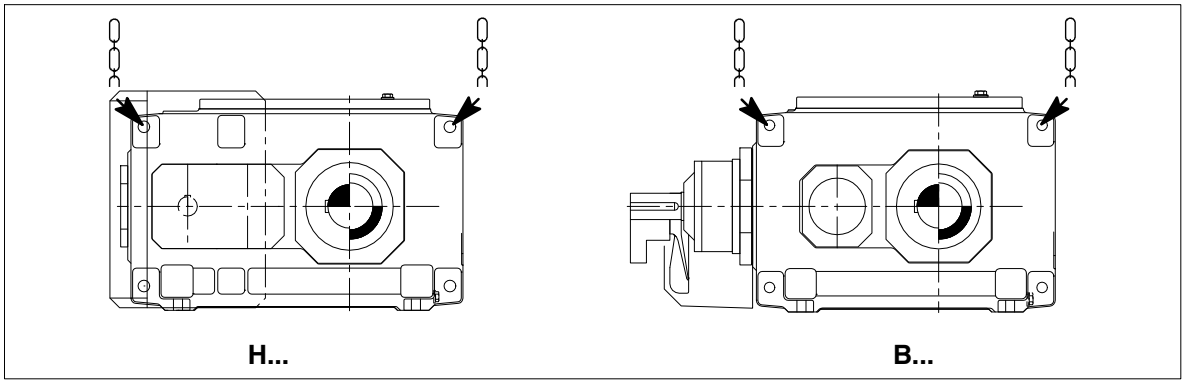

Fig. 3: Attachment points on gear units types H... and B...

For drive units where add-on parts such as motor, add-on coupling etc. are mounted on the gear unit an additional attachment point may be required because of the shift in the centre of gravity.

STOP **Units which are slung by eyebolts must not be tilted.**

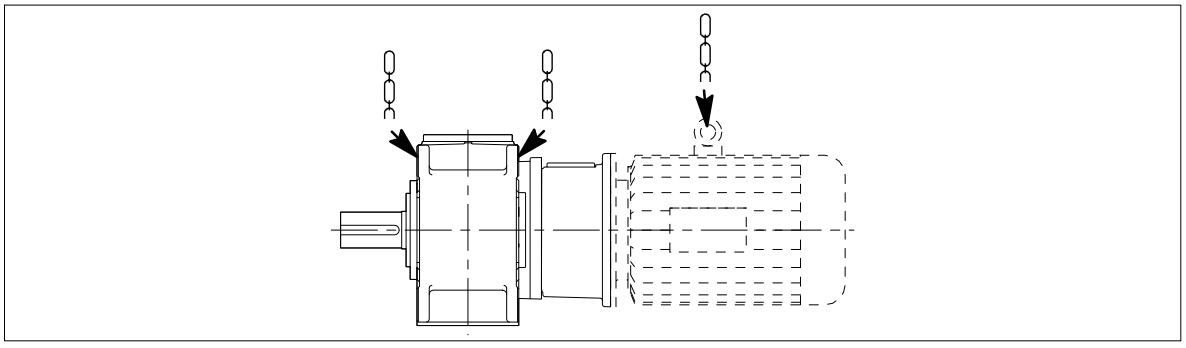

Fig. 4: Attachment points on gear units types H... with motor

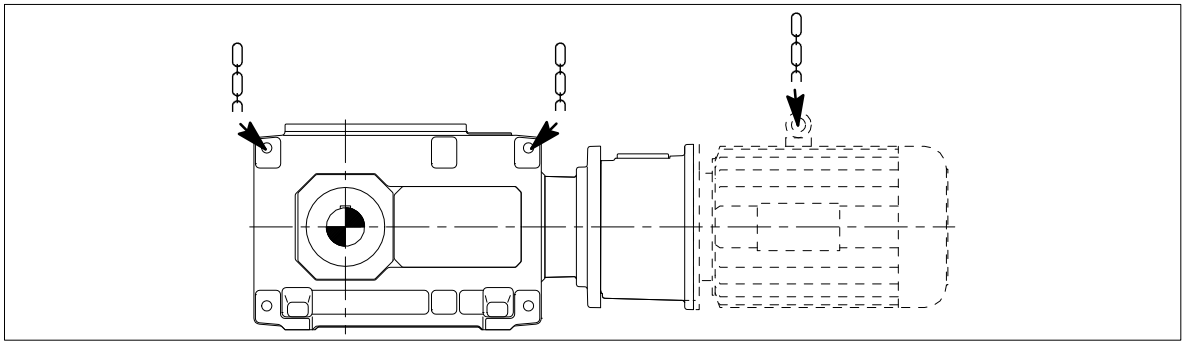

Fig. 5: Attachment points on gear units types B... with motor

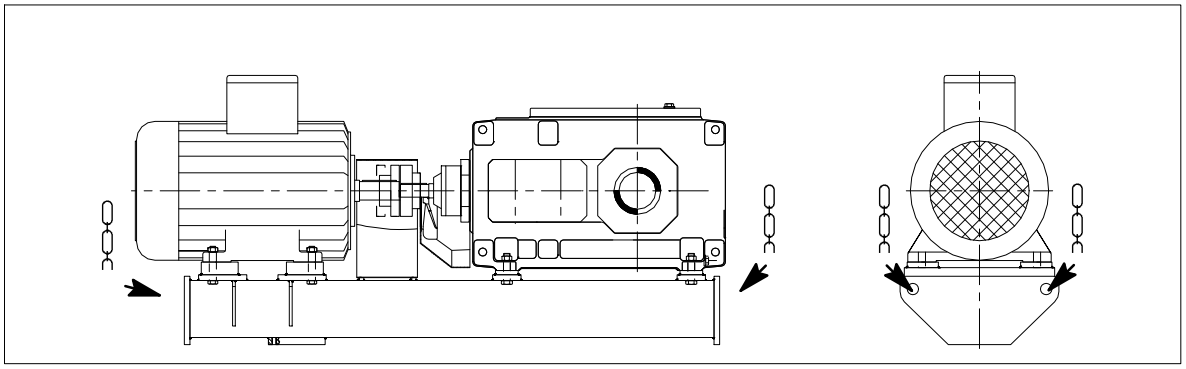

Fig. 6: Attachment points on gear units types B... with gear-unit swing base

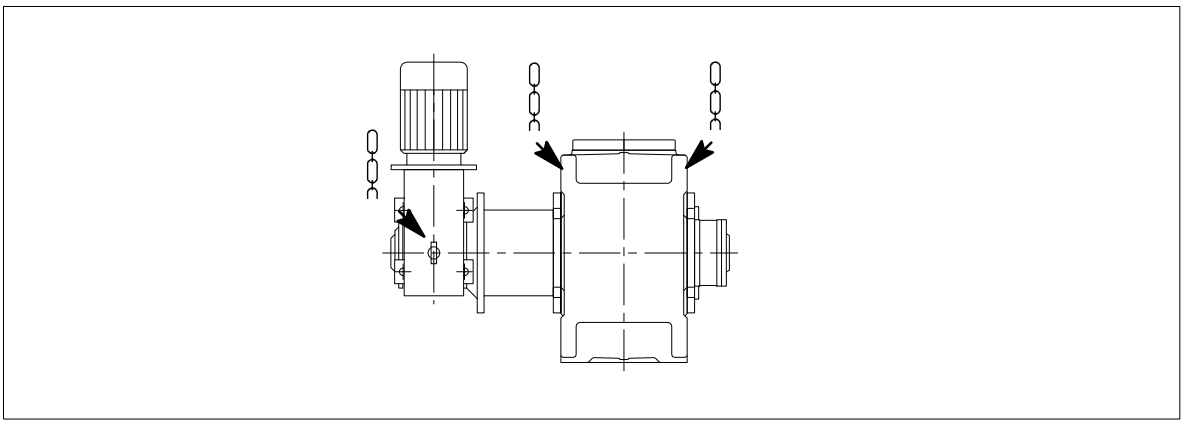

Fig. 7: Attachment points on gear-units types B3.H / T3.H with auxiliary drive

A detailed view of the gear unit can be obtained from the drawings in the gear-unit documentation.

4.3 Storing the gear unit

The gear unit must be stored in the position of use in a sheltered place; it must be placed on a vibration-free, dry base and covered over.

STOP **When temporarily storing the gear unit and any single components supplied with it, the preservative agent should be left on them. It must not be damaged, otherwise there is a risk of corrosion.**

⚠ **Do not stack gear units on top of one another.**

STOP **If the gear unit is being stored out of doors, it must be particularly carefully covered, and care must be taken that neither moisture nor foreign material can collect on the unit. Waterlogging should be avoided.**

☞ Unless otherwise agreed by contract, the gear unit must not be exposed to harmful environmental factors such as chemically aggressive products.

Provision for special environmental conditions during transport (e.g. transport by ship) and storage (climate, termites, etc.) must be contractually agreed.

4.4 Standard coating and preservation

The gear unit is provided with an interior preservative agent; the free shaft ends are painted for protection.

The characteristics of the external coat depend on the ambient conditions stipulated in the order relating to method of transport and area of application.

The gear unit is normally delivered completely ready, with a priming and a finish coat.

Where gear units are delivered with a priming coat only, it is necessary to apply a finish coat in accordance with directives applying to the specific application.
The priming coat alone is not suitable to provide a sufficient long-term corrosion protection.

Ensure that the coat is not damaged!

Any damage may cause failure of the external protective coating and corrosion.

Unless otherwise contractually agreed, the interior preservation is guaranteed for 6 months, and the preservation of the free shaft ends for 24 months, provided that storage is in dry, frostfree sheds.

The guarantee period starts on the date of delivery or that of the notice that the item is ready for shipment.

For longer periods of storage (> 6 months) we advise regular checking and, if necessary, renewal of the interior and exterior preservation (see section 7, "Start-up").

The output shaft must then be rotated at least one turn to change the position of the rolling element in the bearings. The input shaft must not be in the same position as before rotation.

This procedure must be repeated and documented every 6 months until start-up.

4.4.1 Interior preservation with preservative agent

Table 8: Durability period and measures for interior preservation when using mineral oil or PAO-based synthetic oil

Duration of protection	Preservative agent	Special measures
up to **6** months	Castrol Alpha SP 220 S	none
up to **24** months		- Close all holes in the gear unit - Replace air filter or breather screw with screw plug. (replace screw plug with air filter or breather screw before start-up)
For storage periods longer than 24 months, renew the preservative agent. For storage periods longer than 36 months, Siemens should be consulted before.		

Table 9: Durability period and measures for interior preservation when using PG-based synthetic oil

Duration of protection	Preservative agent	Special measures
up to **6** months	Special anti-corrosion oil TRIBOL 1390 [1)]	none
up to **36** months		- Close all holes in the gear unit - Replace air filter or breather screw with screw plug. (replace screw plug with air filter or breather screw before start-up)
For storage periods longer than 36 months, Siemens should be consulted before.		

1) Resistant to tropical conditions and sea water; max. ambient temperature 50 °C

4.4.2 Exterior preservation

Table 10: Durability period for exterior preservation of shaft ends and other bright machined surfaces

Duration of protection	Preservative agent	Layer thickness	Remarks
in case of indoor storage up to **36** months [1)]	Tectyl 846 K19	approx. 50 µm	Long-term wax-based preservative agent: - resistant to seawater - resistant to tropical conditions - (soluble with CH compounds)
in case of outdoor storage up to **12** months [2)]			

1) The gear unit must be stored in the position of use in a sheltered place; it must be placed on a vibration-free, dry wooden base and covered over.

2) If the gear unit is being stored out of doors, it must be particularly carefully covered, and care must be taken that neither moisture nor foreign material can collect on the unit. Waterlogging should be avoided.

☞ The procedure for interior and exterior preservation treatment is described in section 7 (see items 7.3.1.3 and 7.3.2.1)!

5. Technical description

Observe the instructions in section 3. "Safety instructions"!

5.1 General description

The helical gear unit is supplied as a one-, two-, three- or four-stage gear unit. The bevel-helical gear unit is supplied as a two-, three- or four-stage gear unit. The gear unit may also be supplied as a multi-stage bevel-helical gear unit or helical gear unit with fitted auxiliary drive. It is designed for installation in the horizontal mounting position. If necessary, it can also be designed for installation in a different position.

STOP **As a principle, the gear unit can be operated in both directions of rotation. The only exceptions are gear types with backstop or overrunning clutch. If rotation reversal is required for these types of unit, Siemens should be consulted.**

A number of shaft configurations (types and rotation directions) are possible. These are shown in the following table as solid shafts:

Table 11: Types and rotation directions

Type	Type A	B	C	D	E	F	G	H	I
H1SH	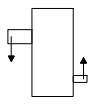	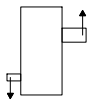							
H2SH H2HM H2HH H2DM H2DH H2KM H2KH H2FM H2FH H2VH H2PH	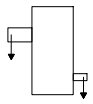	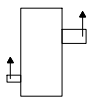	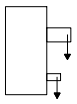	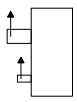	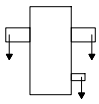	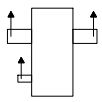	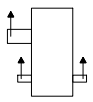	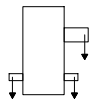	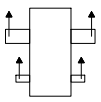
H3SH H3HM H3HH H3DM H3DH H3KM H3KH H3FM H3FH H3VH	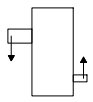	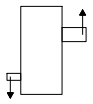	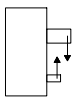	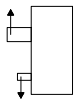	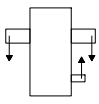	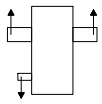	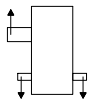	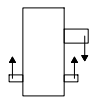	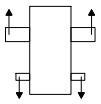
H4SH H4HM H4HH H4DM H4DH H4KM H4KH H4FM H4FH H4VH	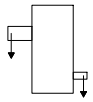		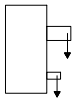		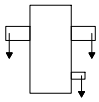	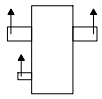			
B2SH B2HM B2HH B2DM B2DH B2KM B2KH B2FM B2FH B2VH	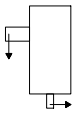	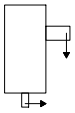	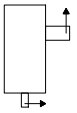	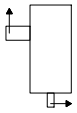	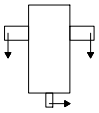	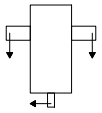			
B3SH B3HM B3HH B3DM B3DH B3KM B3KH B3FM B3FH B3VH T3SH T3VH T3DH T3HH T3KH T3FH	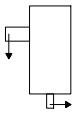	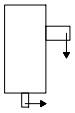	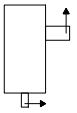	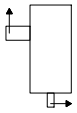	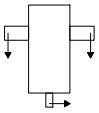	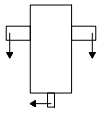			

Type	Type A	B	C	D	E	F	G	H	I
B4SH B4HM B4HH B4DM B4DH B4KM B4KH B4FM B4FH B4VH	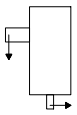	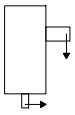	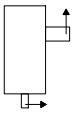	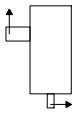	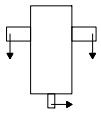	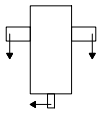			

When mounting the auxiliary drive (as maintenance and/or load drive) the assignment of the direction of rotation to the design is defined in the dimensioned drawing.

The gear units are characterised by a low noise level. This is achieved by helical and bevel-helical gears with a high contact ratio and special sound-damping housings.
The good temperature characteristics of the gear unit are achieved by its high degree of efficiency, large housing surface and performance-related cooling system.

5.2 Output designs

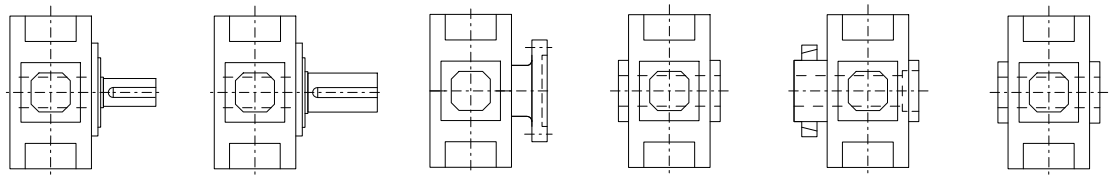

..S.	**..V.**	**..F.**	**..H.**	**..D.**	**..K.**
Solid shaft	Solid shaft, reinforced	Flanged shaft	Hollow shaft with parallel keyway	Hollow shaft for shrink disk	Hollow shaft with internal spline to DIN 5480

Fig. 8: Output designs

5.3 Housing

The housing is of cast iron; if required, they may also be of steel.

Housings up to size 12 are made in one part. The exception are types H1SH and H2PH, which have a two-part housing similar to those of sizes 13 to 22 of the other types. The housing is rigid in design and due to its form has excellent noise and temperature characteristics.

The gear-unit housing comes with the following equipment:

- Lifting eyes (adequately dimensioned for transport)
- Inspection and/or assembly cover (for oil filling and/or inspection)
- Oil-sight glass or oil dipstick (to check the oil level)
- Oil-drain plug (for oil drain)
- Air filter or venting screw (for aeration and ventilation)

Colour codes for ventilating, oil inlet, oil level and oil drainage:

Air relief point:	yellow		Oil-draining point:	white	
Oil-filling point:	yellow		Lubrication point:	red	
Oil level:	red		Oil level:	red	

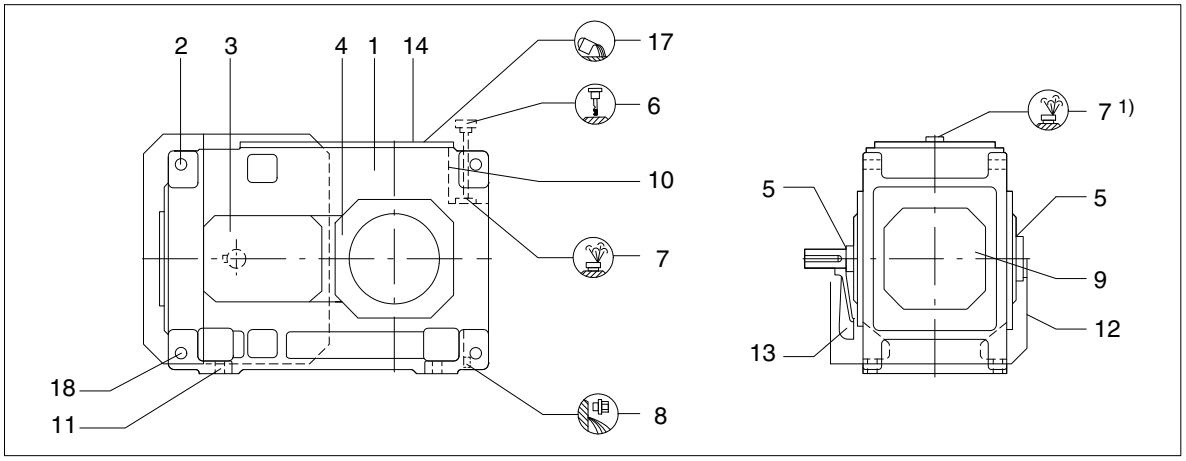

Fig. 9: Gear-unit features on gear units type H..H ≤ 12

1) for H1SH only

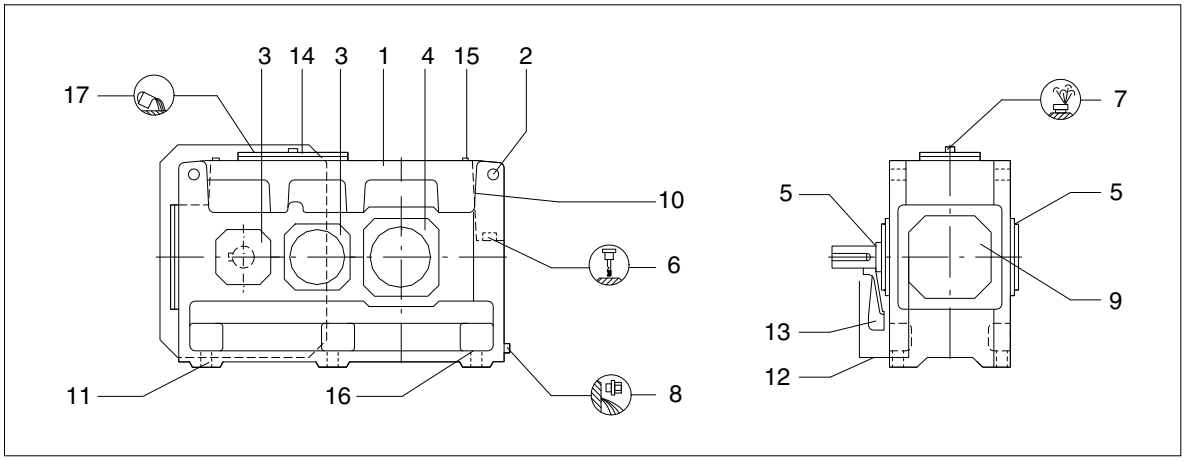

Fig. 10: Gear-unit features on gear units type H..H ≥ 13

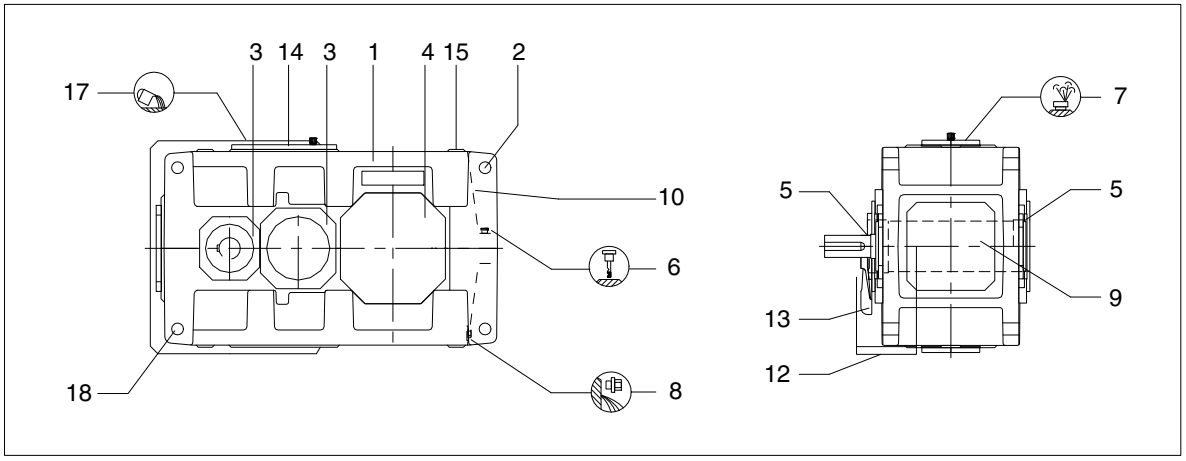

Fig. 11: Gear-unit features on gear units type H..M ≥ 13

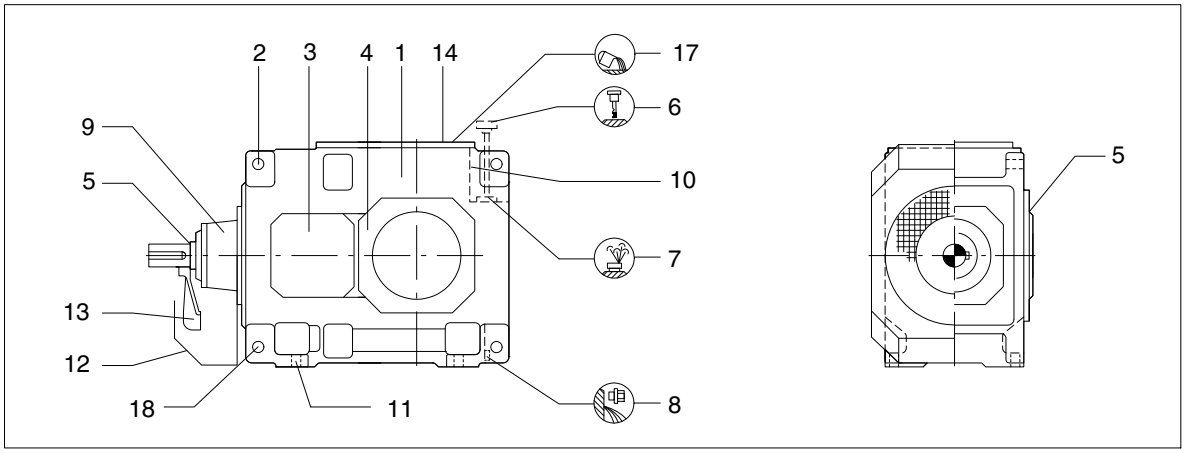

Fig. 12: Gear-unit features on gear units types B..H and T..H ≤ 12

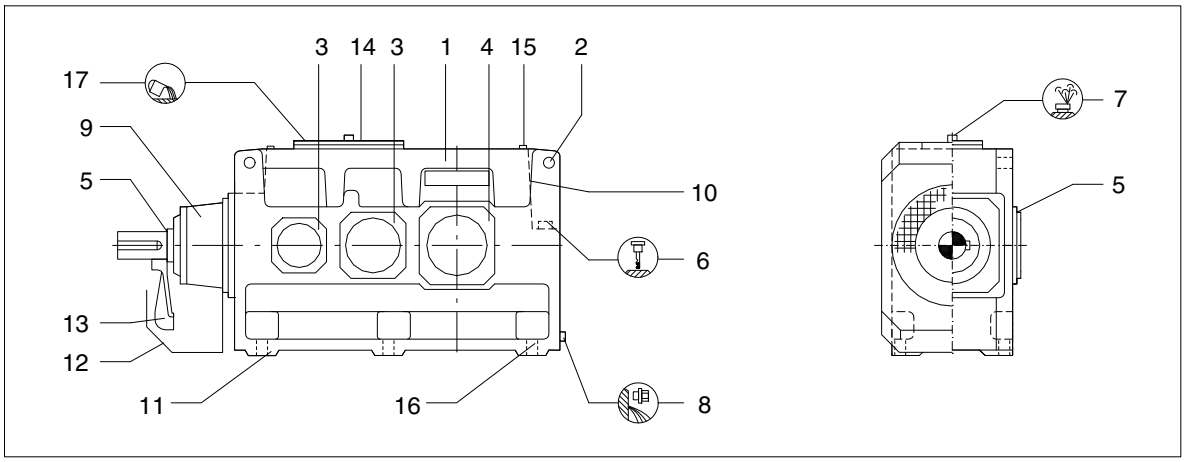

Fig. 13: Gear-unit features on gear units type B..H ≥ 13

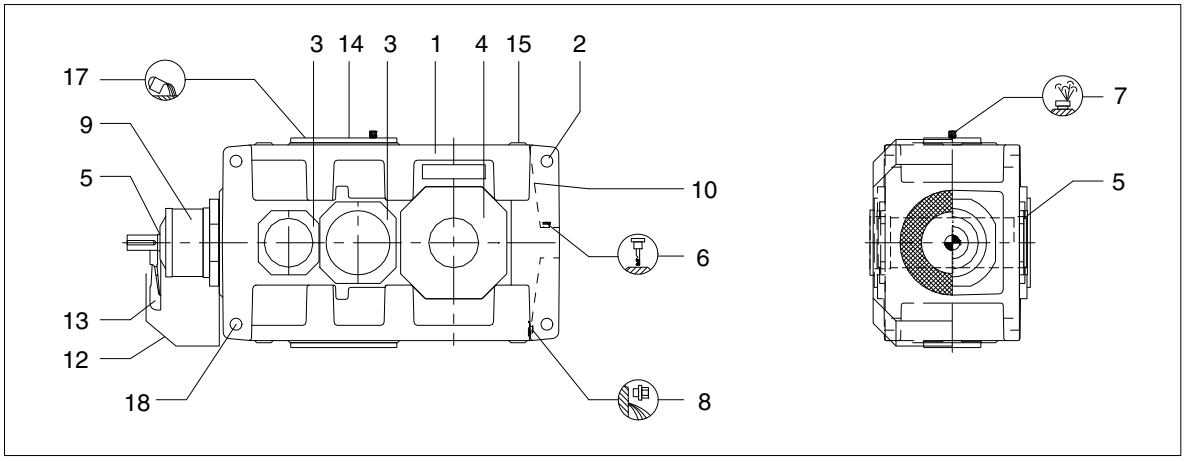

Fig. 14: Gear-unit features on gear units type B..M ≥ 13

1	Housing	10	Rating plate
2	Lifting eyes	11	Gear-unit fastening
3	Cover	12	Fan cowl
4	Cover	13	Fan
5	Shaft seals	14	Inspection and/or assembly cover
6	Oil dipstick	15	Alignment surfaces
7	Housing ventilation	16	Alignment thread
8	Oil-drain plug	17	Oil inlet
9	Cover and/or bearing journal	18	Fastening for torque arm

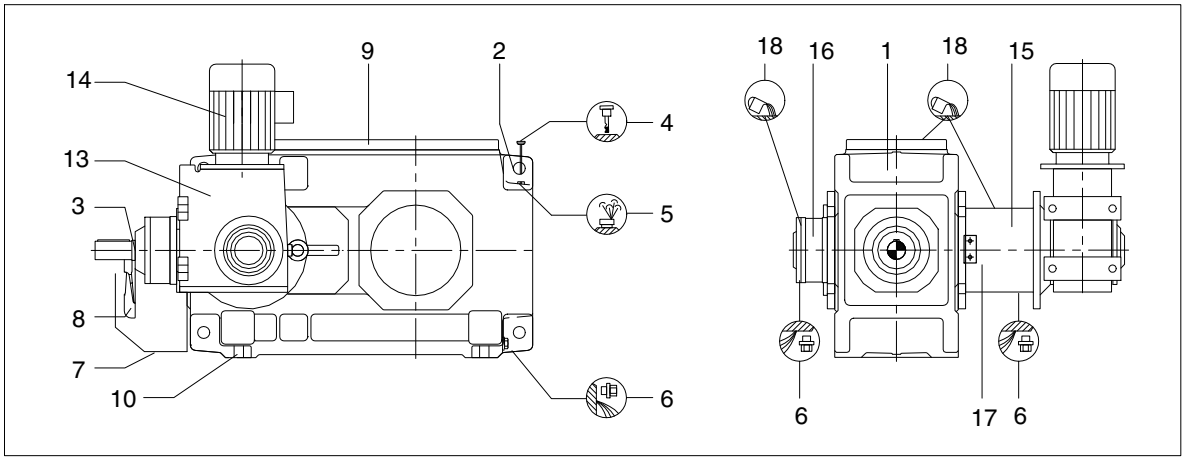

Fig. 15: Gear-unit features on gear units types B3.H / T3.H ≤ 12

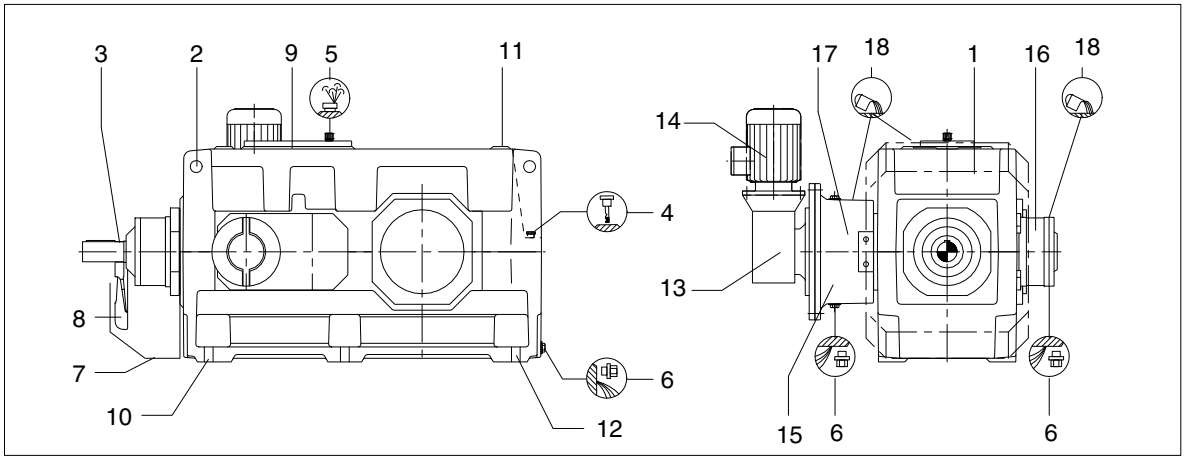

Fig. 16: Gear-unit features on gear units type B3.H ≥ 13

1	Main gear unit	10	Gear-unit fastening
2	Lifting eyes	11	Alignment surfaces
3	Shaft seals	12	Alignment thread
4	Oil dipstick	13	Auxiliary gear unit
5	Housing ventilation	14	Electric motor
6	Oil-drain plug	15	Overrunning clutch
7	Fan cowl	16	Backstop
8	Fan	17	Speed-monitoring device
9	Inspection or assembly cover	18	Oil-filler plug

A detailed view of the gear unit can be obtained from the drawings in the gear-unit documentation.

5.4 Toothed components

The externally toothed components of the gear unit are case-hardened. Helical-gear teeth are ground. The high quality of the teeth leads to a significant noise reduction and ensures safe and reliable running.

The gears are connected with the shafts by interference fits and parallel keys or by shrink fits. These types of joints transmit with adequate reliability the torques generated.

5.5 Lubrication

5.5.1 Splash lubrication

Unless otherwise agreed in the order, the teeth and bearings are adequately splash-lubricated with oil. The gear unit thus requires very little maintenance.

5.5.2 Pressure lubrication through add-on oil-supply system

In non-horizontal positions, with high bearing speeds or peripheral velocities on the teeth, the splash lubrication system may be supported and/or replaced with a pressure-lubrication system.

The oil-supply system is permanently attached to the gear unit and consists of a flange pump, a coarse filter, a pressure-monitoring device and pipework. For gear units of sizes 13 to 22, the coarse filter is replaced with a double change-over filter.

The direction of flow from the flange pumps is **independent of the direction of rotation**.

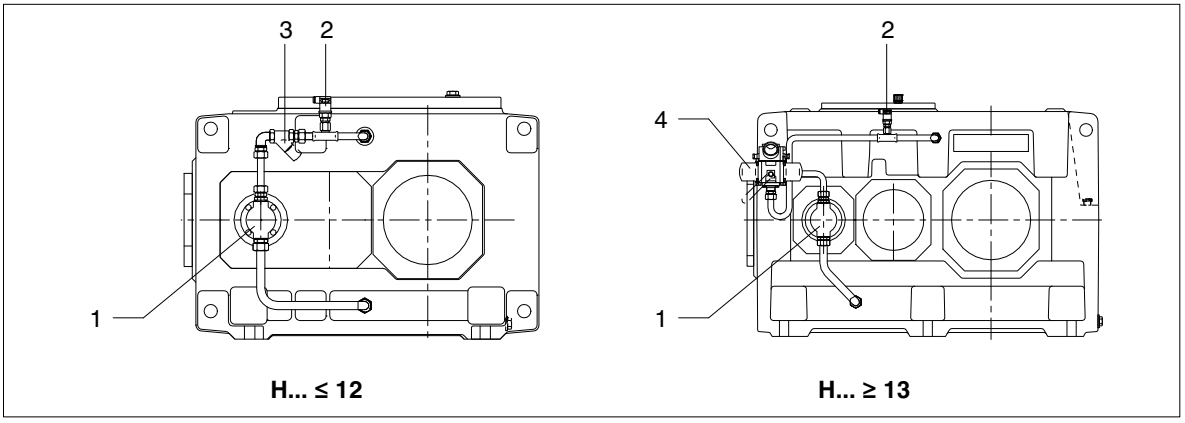

Fig. 17: Add-on oil-supply system on gear units type H...

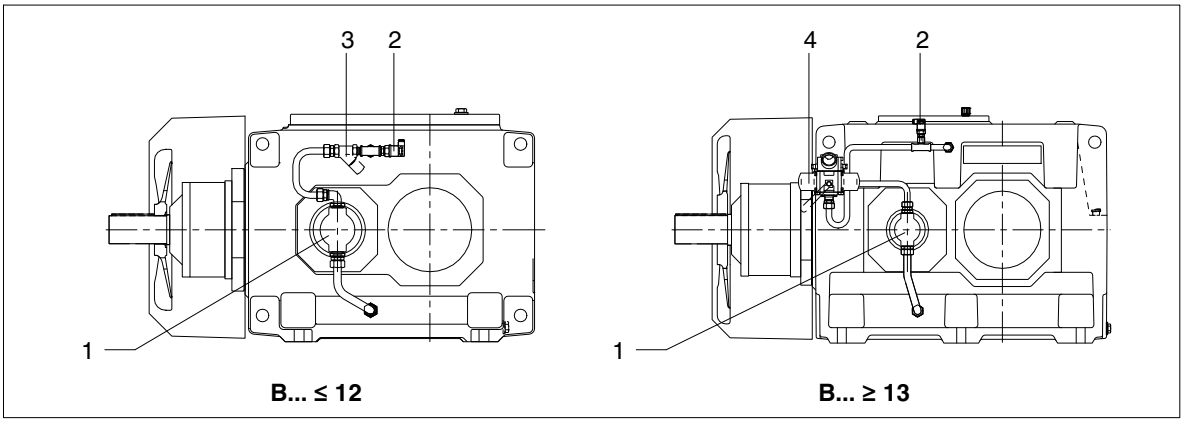

Fig. 18: Add-on oil-supply system on gear units type B...

1	Flange pump	3	Coarse filter
2	Pressure monitor	4	Double change-over filter

A detailed view of the gear unit can be obtained from the drawings in the gear-unit documentation.

In the case of gear units with add-on oil-supply system, before starting the unit up the pressure monitor must always be connected so as to be ready for operation.

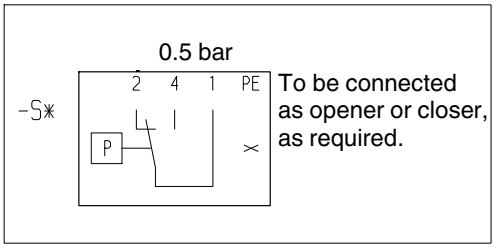

Depending on the order specification and application, the flange pump may be replaced with a motor pump.

When operating and servicing the components of the oil-supply system, observe the operating instructions of the components.
For technical data, refer to the data sheet and/or the list of equipment.

5.6 Shaft bearings

All shafts are mounted in rolling bearings.

5.7 Shaft seals

Depending on requirements, radial shaft sealing rings, labyrinth seals, or Taconite seals or Tacolab seals are mounted at the shaft exits to prevent oil from leaking from the housing and dirt from entering it.

5.7.1 Radial shaft-sealing rings

Radial shaft-sealing rings are the standard type of seal. They are fitted preferably with an additional dust lip to protect the actual sealing lip from external contamination.

Use in an area with much dust is not possible.

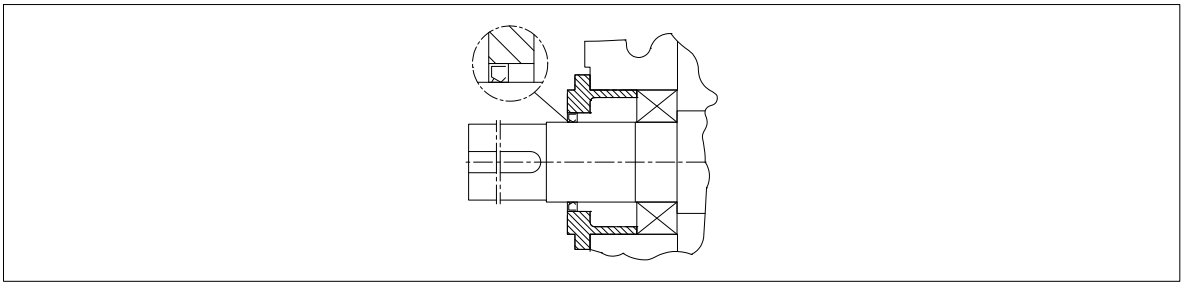

Fig. 19: Radial shaft-sealing ring

5.7.2 Labyrinth seals

Labyrinth seals are non-contacting and avoid wear to the shaft. They therefore require no maintenance and ensure favourable temperature characteristics. They can be used only with certain transmission ratios and minimum speeds.

Check in the spare parts drawing and the spare parts list whether the gear unit is provided with labyrinth seals.

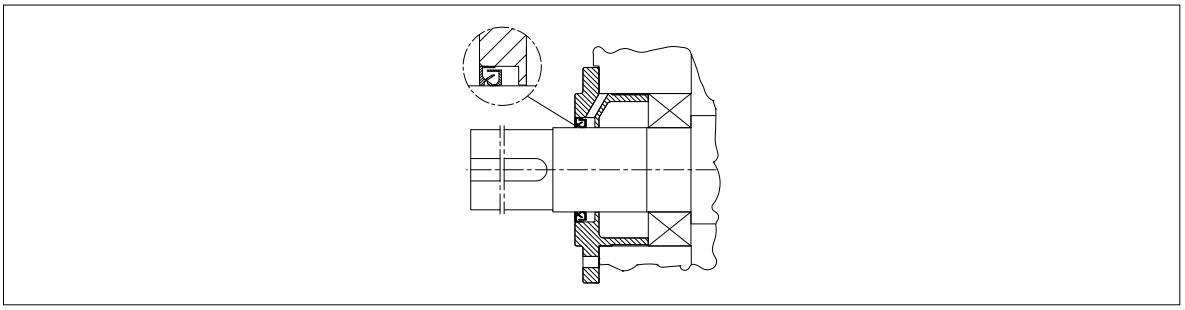

Fig. 20: Labyrinth seal

For reliable operation, this type of seal requires stationary, horizontal positioning in a splash-free and relatively dust-free environment. Overfilling of the gear unit can cause leakage, as can oil with high foam content.

5.7.3 Taconite seals

Taconite seals were specially developed for use in a dusty environment. The penetration of dust is prevented by a combination of three seal elements (radial shaft-sealing ring, lamellar seal and grease-charged labyrinth seal).

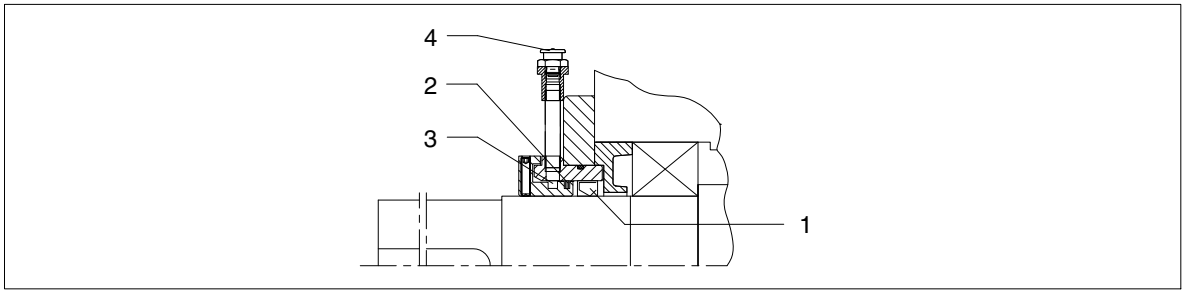

Fig. 21: Taconite seal

1	Radial shaft-sealing ring	3	Grease-charged labyrinth seal (re-chargeable)
2	Lamellar seal	4	Flat grease nipple AM10x1 to DIN 3404

Taconite seals are divided into the following types:

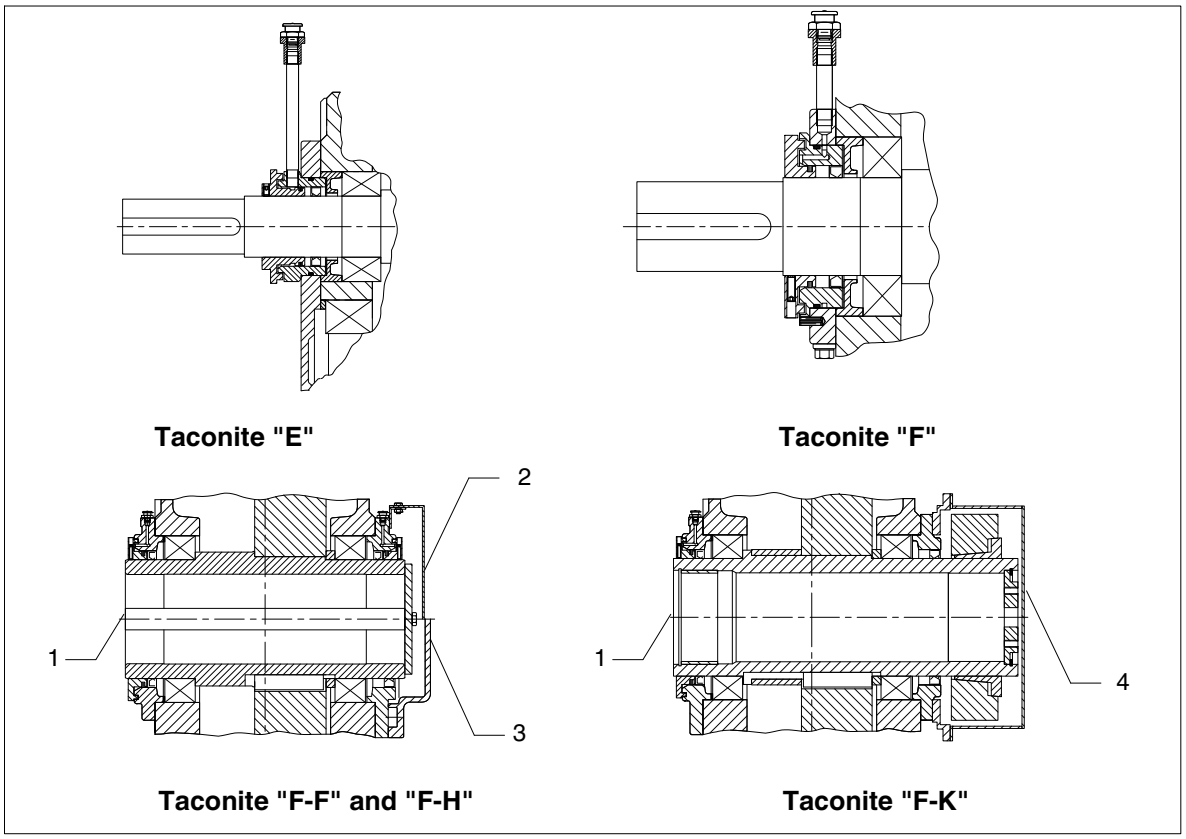

Fig. 22: Taconite seal, variants E, F, F-F, F-H and F-K

1	Output	3	Taconite "F-H"
2	Taconite "F-F"	4	Taconite "F-K"

Table 12: Variant description Taconite seal

Taconite type variant	Application	Remarks
"E"	All input shafts with or without fan	Re-chargeable labyrinth
"F"	Output shaft Type S (Solid shaft) Type V (Solid shaft, reinforced) Type F (Flanged shaft)	
"F-F"	Output shaft Type H (Hollow shaft with parallel keyway) Type K (Hollow shaft with internal spline to DIN 5480)	Labyrinth re-chargeable on both sides, incl. dustproof cowl to prevent contact on gear side facing away from output
"F-H"	Output shaft Type H (Hollow shaft with parallel keyway) Type K (Hollow shaft with internal spline to DIN 5480	Labyrinth re-chargeable on output side; dustproof cowl on opposite side
"F-K"	Output shaft Type D (Hollow shaft for shrink disk)	

STOP **The specified frequencies must be observed (see section 10, "Maintenance and repair") for re-charging the labyrinth seals with grease.**

5.7.4 Tacolab seal

Tacolab seals are non-contacting seals, operating wearfreely and requiring very little maintenance and which thus do not cause operating interruptions.

The Tacolab seal is made up of two parts:

– an oil labyrinth preventing lubricating oil from escaping,

– dust seal filled with grease, which permits the use in very dusty environments.

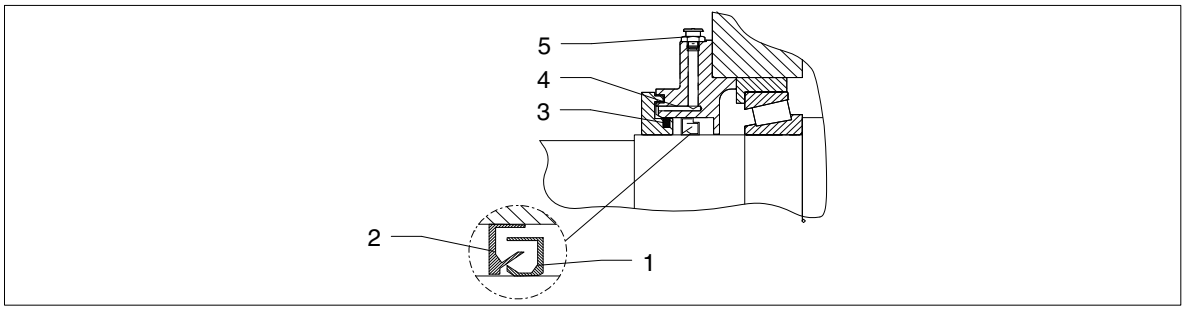

Fig. 23: Tacolab seal

1 Labyrinth sealing ring
2 Labyrinth sealing ring
3 Lamellar seal
4 Grease-charged labyrinth seal (re-chargeable)
5 Flat grease nipple AM10x1 to DIN 3404

5.8 Backstop

For certain requirements, the gear unit can be fitted with a mechanical backstop. This backstop permits only the specified direction of rotation during the operation of the unit. The direction of rotation is marked by a corresponding arrow on the input and output side of the gear unit.

The backstop is mounted oiltight on an adapter flange on the gear unit and integrated in its oil-circulation system.

The backstop is fitted with centrifugally operated sprags. If the gear unit rotates in the prescribed direction, the inner ring rotates with the sprag cage in the direction of shaft rotation, while the outer ring remains stationary. From a specific speed up (disengagement speed) the sprags disengage from the outer ring. In this operating condition the backstop operates wearfreely.

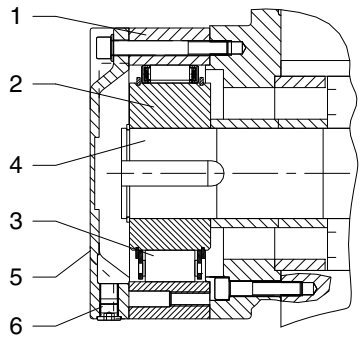

Fig. 24: Backstop

1	Outer ring	4	Shaft
2	Inner ring	5	Cover
3	Cage with sprags	6	Residual-oil drain

The backstop direction can be changed by turning the cage around. If a change in backstop direction is required, Siemens should be consulted beforehand.

To avoid damaging the backstop or the gear unit, the motor must not be run adversely to the stop direction of the gear unit.
Observe the notice fixed to the gear unit.
The minimum lift-off speeds must not be exceeded during operation.

Before connecting the motor, determine the direction of rotation of the three-phase current supply using a phase-sequence indicator, and connect the motor in accordance with the pre-determined direction of rotation.

5.9 Torque-limiting backstop (special design)

A torque-limiting backstop is available for special uses, e.g. dual drives. The backstop is a combination of a backstop with centrifugally operated sprags and a brake. The slipping torque is set by a number of compression springs.

This "slipping" will protect the gear unit and the sprags of the backstop from inadmissibly high stresses during negative rotation. In addition, a uniform load distribution onto both gear units is achieved during negative rotation when using dual drives.

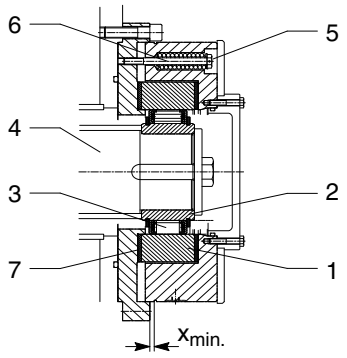

Fig. 25: Torque-limiting backstop

1	Outer ring	5	Locking wire
2	Inner ring	6	Lead screw with compression spring
3	Cage with sprags	7	Friction lining
4	Shaft (adapter flange)		

The torque-limiting backstop is attached to the gear unit by means of an adapter flange to form an oiltight seal and is integrated in its oil circulation system.

☞ The stop direction can be changed by turning the cage around. If a change in stop direction is required, Siemens should be consulted beforehand.

☞ The slipping torque was set at the correct value at the Siemens works; resetting during startup is not permissible.
To safeguard the set slipping torque, the lead screws of the compression springs are secured with locking wire. The warranty will expire if the locking wire for the screws is missing or has been damaged.

STOP **For safety reasons, it is absolutely prohibited to change the slipping torque.**
After having stopped the motor, there is a danger that the load is not safely held in its position and can run in reverse direction at high speed.

☞ As a rule, the backstop operates without wear. As a precaution, the dimension "$x_{min.}$" must be checked once yearly and after every releasing operation (Type FXRT only).

STOP **To avoid damaging the backstop or the gear unit, the motor must not be run adversely to the stop direction of the gear unit.**
Observe the notice fixed to the gear unit.

5.10 Cooling

Depending on requirements, the gear unit is fitted with a fan, a cooling coil, an added-on oil-supply system with oil cooler or a separately provided oil-supply system. In the case of a separate oil-supply system, the specific instructions for this oil-supply system must be observed.

☞ When installing the gear unit free convection must be ensured on the housing surface, in order to definitely avoid overheating the gear unit.

5.10.1 Fan

As a rule the fan is mounted on the high-speed shaft of the gear unit and is protected from accidental contact by an air guide cover. The fan sucks air through the grid of the air guide cover and blows it along the air ducts on the side of the gear housing. It thereby dissipates a certain amount of heat from the housing.

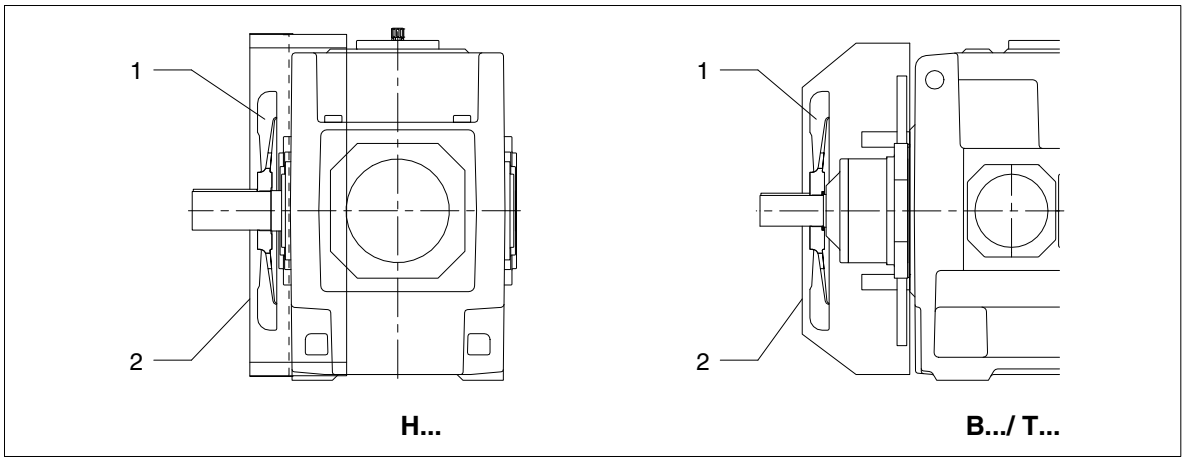

Fig. 26: Fan on gear units types H..., B... and T...

1 Fan 2 Air guide cover

A detailed view of the gear unit can be obtained from the drawings in the gear-unit documentation.

STOP **For gear units fitted with a fan, sufficient space must be allowed for air intake when mounting the safety guards for the coupling or other components.**
The correct distance is given in the dimensioned drawing in the gear-unit documentation.
It must be ensured that the fan cowl is correctly fastened. The fan cowl must be protected against damage from outside. The fan must not come into contact with the fan cowl.

STOP **The cooling effect is considerably reduced if the fan or the gear housing are dirty (see section 10, "Maintenance and repair").**

5.10.2 Cooling coil

The gear unit can be fitted with a cooling coil in the oil sump. Cooling water is supplied by way of a water connection. The operator must ensure this. Either fresh water, sea water or brackish water can be used for cooling purposes.

When water is flowing through the cooling coil, a certain amount of heat is transferred from the oil to the water and thereby removed from the system.

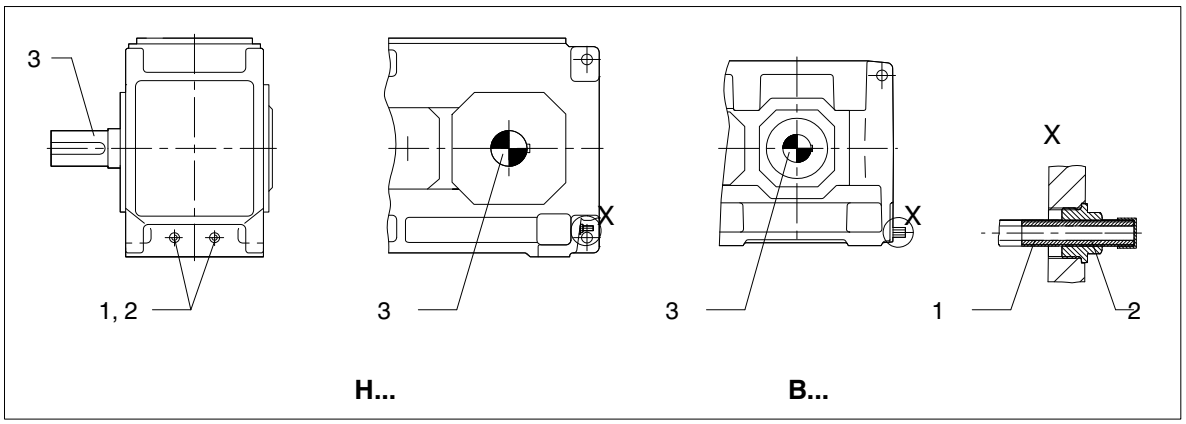

Fig. 27: Cooling coil on gear units types H... and B...

1 Cooling-water connection 2 Reducing screw 3 Output shaft

A detailed view of the gear unit can be obtained from the drawings in the gear-unit documentation.

STOP

The water can flow through the gear unit in either direction. The pressure of the cooling water must not exceed 8 bar.
If the gear unit is being withdrawn from service for a longer period and if there is a danger of freezing, the cooling water must be drained off. Remove any remaining water with compressed air.
The ends of the cooling coil must never be twisted because this could destroy the cooling coil.
The reducing bolt must not be tightened or demounted because this may result in damage to the cooling coil.

Be especially careful when blowing with compressed air.
Wear protective glasses!

Avoid too high pressure on the cooling-water entry. For this a cooling-water flow control must be used (e.g. a pressure reducer or a suitable valve).

For connecting dimensions, refer to the dimensioned drawing of the gear unit. The required cooling water quantity and the max. permissible inlet temperature are given on the data sheet and/or the list of equipment.

Table 13: Cooling-water quantity required (l/min)

Type	3	4	5	6	7	8	9	10	11	12	13	14	15	16	17	18	19	20 to 22
H1SH	4	-	4	-	4	-	8	-	8	-	8	-	8	-	8	-	1)	-
H2.H	-	4	4	4	4	4	8	8	8	8	8	8	8	8	8	8	1)	1)
H2.M	-	-	-	-	-	-	-	-	-	-	8	8	8	8	8	8	1)	1)
H3.H	-	-	4	4	4	4	4	4	8	8	8	8	8	8	8	8	1)	1)
H3.M	-	-	-	-	-	-	-	-	-	-	8	8	8	8	8	8	1)	1)
B2.H	-	4	8	4	8	4	8	8	8	8	8	8	8	8	8	8	-	-
B3.H	-	4	4	4	4	4	8	8	8	8	8	8	8	8	8	8	1)	1)
B2.M	-	-	-	-	-	-	-	-	-	-	8	8	8	8	8	8	-	-
B3.M	-	-	-	-	-	-	-	-	-	-	8	8	8	8	8	8	1)	1)

1) on request

☞ Refer to the order-specific dimensioned drawing for connecting dimensions.

5.10.3 Add-on oil-supply system with air oil-cooler

For types H1.., H2.. and B2.., an oil-supply system with air oil-cooler may be applied. This oil-cooling system is permanently attached to the gear unit.

Components:

- air oil-cooler
- flange pump
- coarse filter (double change-over filter from size 13)
- pressure-monitoring device
- temperature-control valve
- pipework

The air oil-cooler is designed to cool the gear oil by means of air from the surrounding atmosphere. Depending on the volume flow, the oil passes through the cooler in one or more streams and through the current of air blown in by the fan. For cold starts, a bypass pipe with a temperature-control valve is provided for.

☞ The flow direction of the pump used is **independent of the direction of rotation**, if nothing is specified in the documentation to the contrary.
When connecting the fittings the actual flow direction must however be observed.

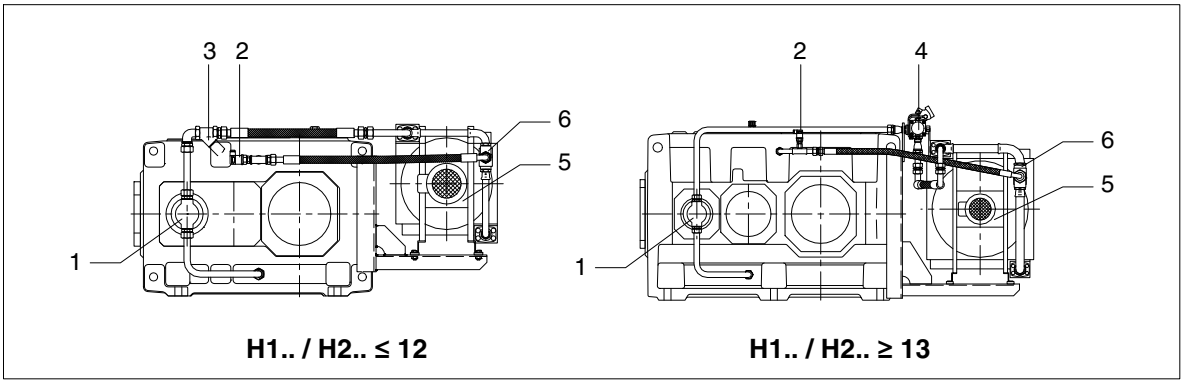

Fig. 28: Air oil-cooling system on gear units types H1.. and H2..

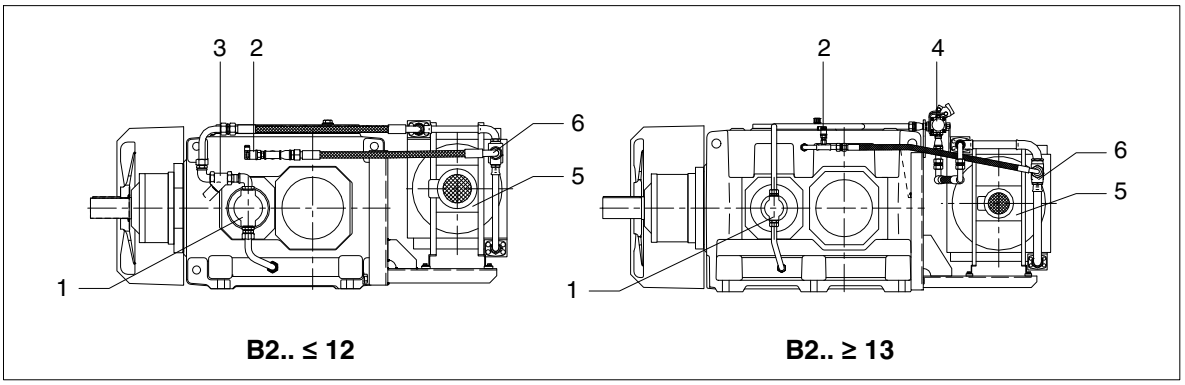

Fig. 29: Air oil-cooling system on gear units types B1.. and B2..

1	Flange pump	4	Double change-over filter
2	Pressure monitor (circuit diagram see item 5.5.2)	5	Air oil-cooler
3	Coarse filter	6	Temperature-control valve

A detailed view of the gear unit can be obtained from the drawings in the gear-unit documentation.

STOP

When installing gear units with add-on air oil-cooling units, it must be ensured that the air circulation is not obstructed.
The required minimum distance from adjacent components, walls, etc. is indicated in the drawings in the unit documentation.
Add-on pressure monitors must be connected as shown in item 5.5.2.

Depending on the application, the flange pump may have been replaced with a motor pump.

When operating and servicing the components of the oil-supply system, observe the operating instructions of the components.
For technical data, refer to the data sheet and/or the list of equipment.

The cooling effect is considerably reduced if the cooler or the gear housing are dirty (see section 10., "Maintenance and repair").

5.10.4 Add-on oil-supply unit with water oil-cooler

For types H1.., H2.. and B2.., an oil-supply system with water oil-cooler may be applied, if required in the order. This is permanently attached to the gear unit.

Components:

- pump
- water oil-cooler
- pipework

Depending on size and/or order-specification the oil-supply unit with water oil-cooler may in addition include the following components:

- filter
- monitoring equipment

☞ The flow direction of the pump used is **independent of the direction of rotation**, if nothing is specified in the documentation to the contrary.
When connecting the fittings the actual flow direction must however be observed.

☞ The required water connection must be provided by the user.

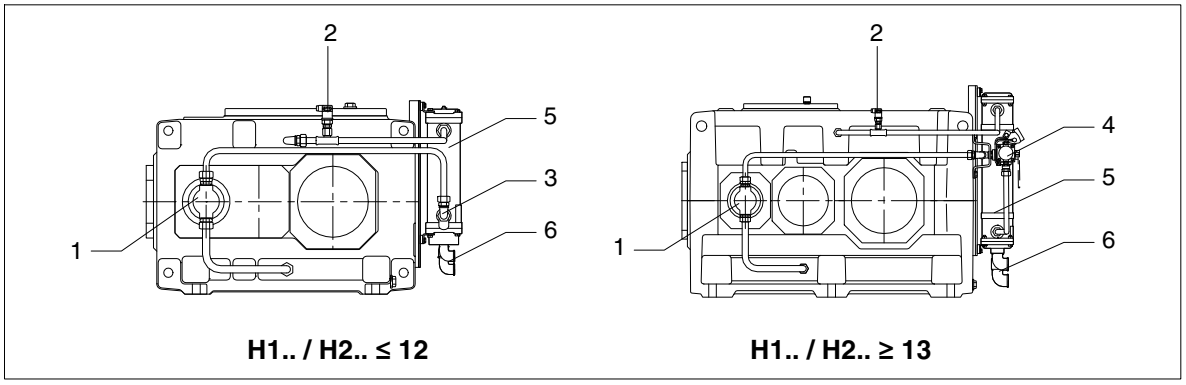

Fig. 30: Water oil-cooling system on gear units types H1.. and H2..

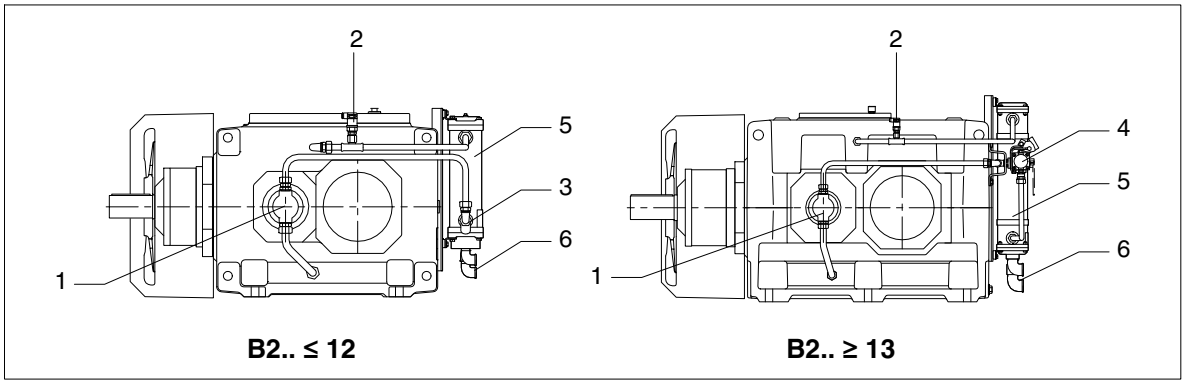

Fig. 31: Water oil-cooling system on gear units type B2..

1	Flange pump	4	Double change-over filter
2	Pressure monitor (circuit diagram see item 5.5.2)	5	Water oil-cooler
3	Coarse filter	6	Water inlet and outlet

A detailed view of the gear unit can be obtained from the drawings in the gear-unit documentation.

To ensure optimum cooling performance, the specified direction of flow in the water oil-cooler must be observed. The cooling-water inlet and outlet must not be reversed. The pressure of the cooling water must not exceed 8 bar.
If the gear unit is being withdrawn from service for a longer period and if there is a danger of freezing, the cooling water must be drained off. Remove any remaining water with compressed air.
Add-on pressure monitors must be connected as shown in item 5.5.2.

Be especially careful when blowing with compressed air.
Wear protective glasses!

Depending on the order specification and application, the flange pump may have been replaced with a motor pump.

For operation and maintenance, always observe the operating instructions indicated in the order-specific appendix.
For technical data, refer to the order-specific list of equipment.

5.10.4.1 Pump

The pumps used are suitable for the delivery of lubricants. The flow medium must not contain abrasive components and must not chemically affect the materials of the pump. A precondition of a proper functioning, high reliability and long service life of the pump is in particular a clean and lubrifying delivery medium.

5.10.4.2 Water oil-cooler

Water oil-coolers are suitable for cooling oils. The cooling medium used is water.

For connecting dimensions, refer to the dimensioned drawing of the gear unit. The required cooling water quantity and the max. permissible inlet temperature are given on the data sheet and/or the list of equipment.

5.10.4.3 Filter

The filter protects downstream aggregates, measuring and control devices from contamination. The filter comprises a housing with connections and a sieve. The medium flows through the housing where the dirt particles flowing trough the pipe are retained.
Dirty filter elements must be cleaned or replaced.

5.11 Heating

At low temperatures it may be necessary to heat the gear oil before switching on the drive unit or even during operation. In such cases the use of heating elements is possible. These heating elements convert electrical energy into heat which is conducted to the surrounding oil. The heating elements are located in protective tubes inside the housing, thus making it possible to replace them without draining off the oil.

Complete immersion of the heating elements in the oil bath must be guaranteed.

The heating elements can be controlled by a temperature monitor which emits a signal when maximum and minimum temperatures are reached; the signal requires amplification.

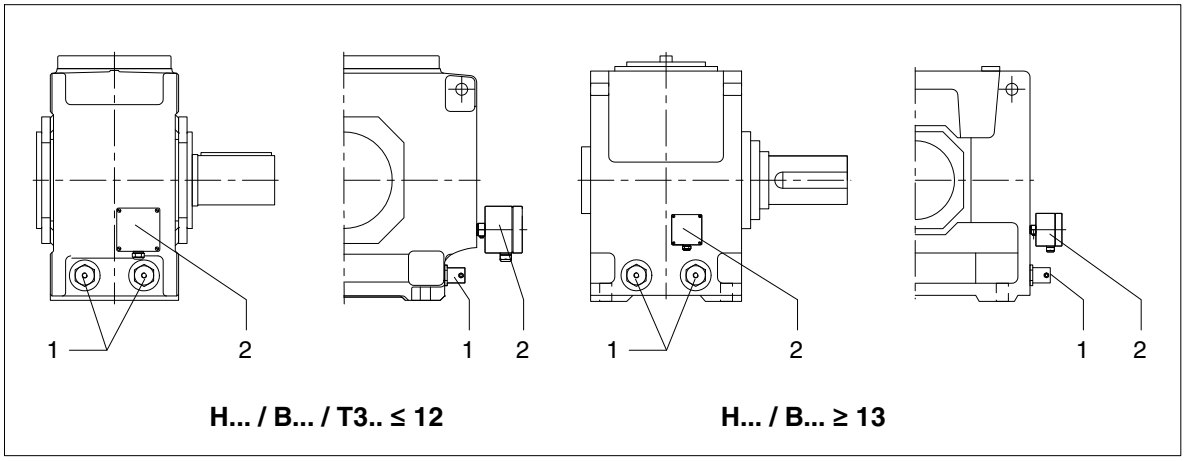

Fig. 32: Heating on gear units types H..., B... and T3..

1 Heating element 2 Temperature monitor

For a detailed illustration of the gear unit and the position of the add-on parts, refer to the drawings in the gear-unit documentation.

STOP **Never switch the heating elements on, unless complete immersion of the heating rod in the oil bath is ensured. Fire hazard!**
If heating elements are installed afterwards the max. heating capacity (see table 14) on the outer surface of the heating element must not be exceeded.

Table 14: Specific heating output P_{Ho}
as a function of the ambient termperature

P_{Ho} (W/cm^2)	Ambient temperature °C
0.9	+ 10 to 0
0.8	0 to - 25
0.7	- 25 to - 50

☞ Operation and maintenance must be in accordance with the pertinent operating instructions. For technical data, refer to the list of equipment.

5.12 Oil-temperature monitoring

Depending on the order specification, the gear unit may be fitted with a Pt 100 resistance thermometer for monitoring the oil temperature in the sump. In order to measure the temperatures or temperature differences, the Pt 100 resistance thermometer should be connected to a suitable instrument provided by the customer. The thermometer has a connection head (protection type IP 54) for the wiring. A two-conductor circuit is provided by the manufacturer. However, the customer may fit his own three- or four-conductor circuit if required.

☞ For control information, refer to the list of equipment.
Observe the operating instructions relating to the device in all instances.

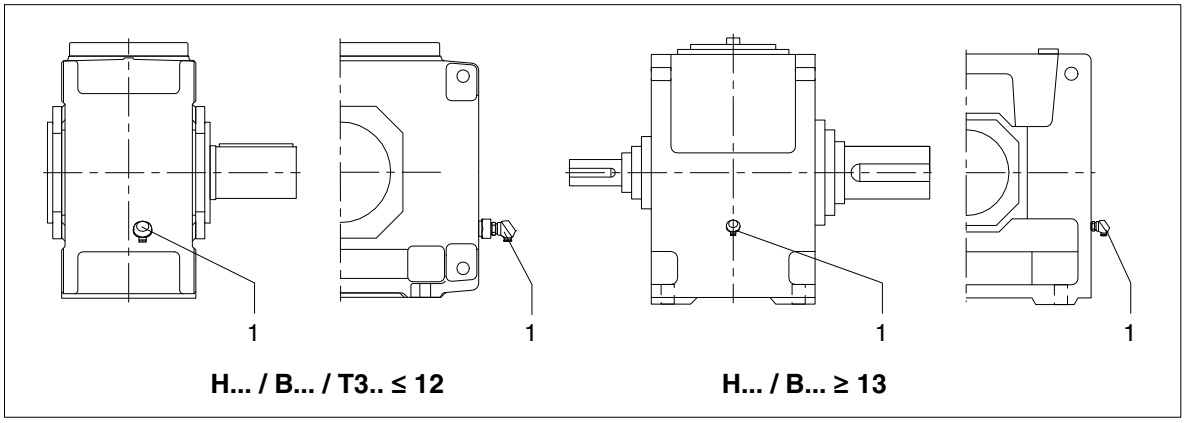

Fig. 33: Oil-temperature measurement on gear units types H..., B... and T3..

1 Pt 100 resistance thermometer

For a detailed illustration of the gear unit and the position of the add-on parts, refer to the drawings in the gear-unit documentation.

☞ When operating and servicing the components, observe the operating instructions relating to the components.
For technical data, refer to the data sheet and/or the list of equipment.

5.13 Oil-level monitoring system

Depending on the order specification, the gear unit can be fitted with an oil-level monitor in the form of a level limit switch. This monitoring is designed as a standstill monitoring (gear unit stop) and checks the level of the oil before the unit is started up. When the signal "oil level too low" is given, it should be wired in such a way that the drive motor cannot start and an alarm is given. During operation, any signal should be bridged.

If an the oil-level monitoring device is in use, it is very important that the unit is in a horizontal position.

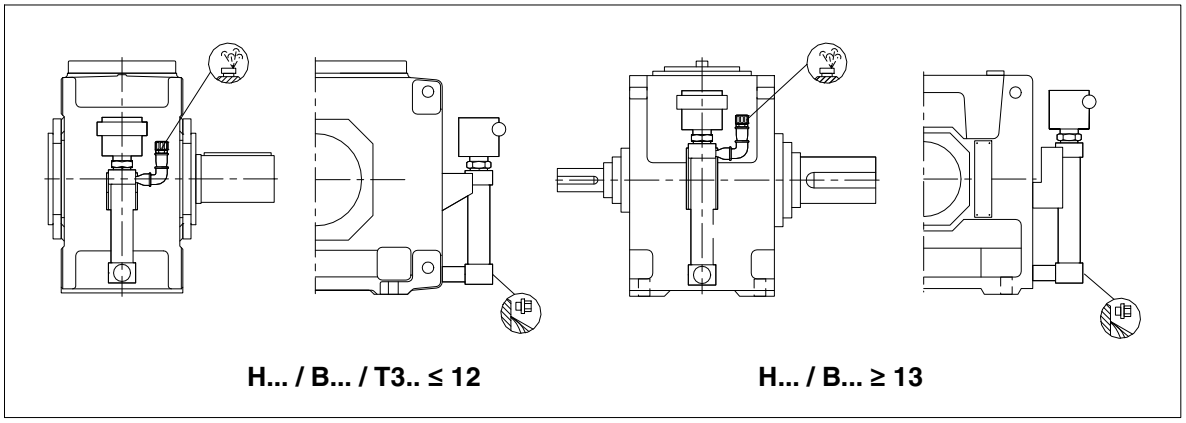

Fig. 34: Oil-level monitoring on gear units types H..., B... and T3..

For a detailed illustration of the gear unit and the position of the add-on parts, refer to the drawings in the gear-unit documentation.

☞ When operating and servicing the components, observe the operating instructions relating to the components.
For technical data, refer to the data sheet and/or the list of equipment.

5.14 Bearing-monitoring system

The gear unit may be fitted with measuring nipples for monitoring the bearings. These nipples are intended for attachment of shock-pulse sensors with rapid-action coupling and are located in the vicinity of the bearings to be monitored.
The gear unit may also be set up for temperature monitoring at the bearing points. The gear unit is then equipped with tapped holes for fitting Pt 100 resistance thermometers. For this version Siemens must be consulted.

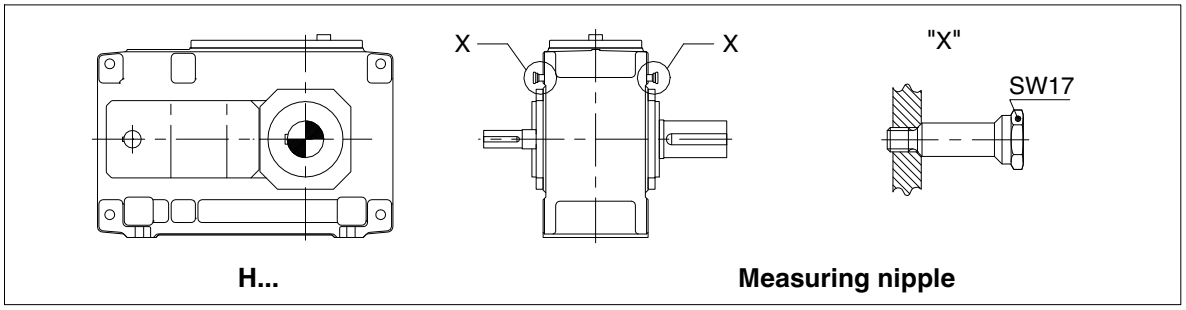

Fig. 35: Bearing monitoring on gear units type H...

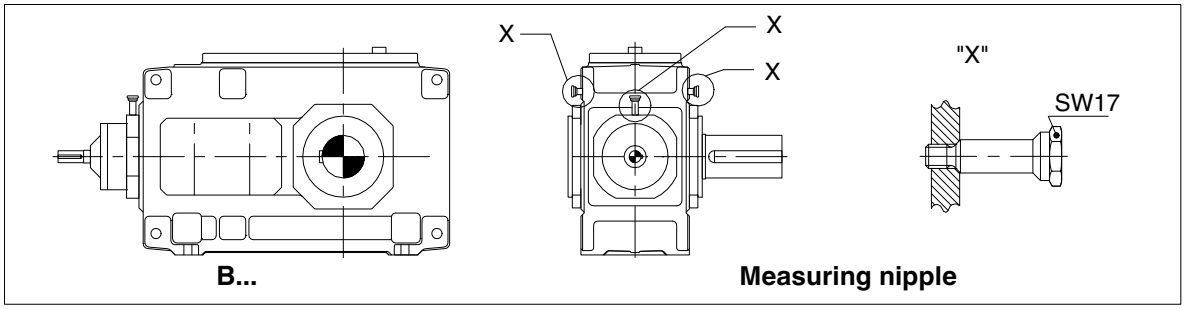

Fig. 36: Bearing monitoring on gear units types B... and T3..

For a detailed illustration of the gear unit and the position of the add-on parts, refer to the drawings in the gear-unit documentation.

5.15 Speed transmitter

An incremental speed transmitter may be mounted. Wiring and evaluation instrument should be provided by the customer.

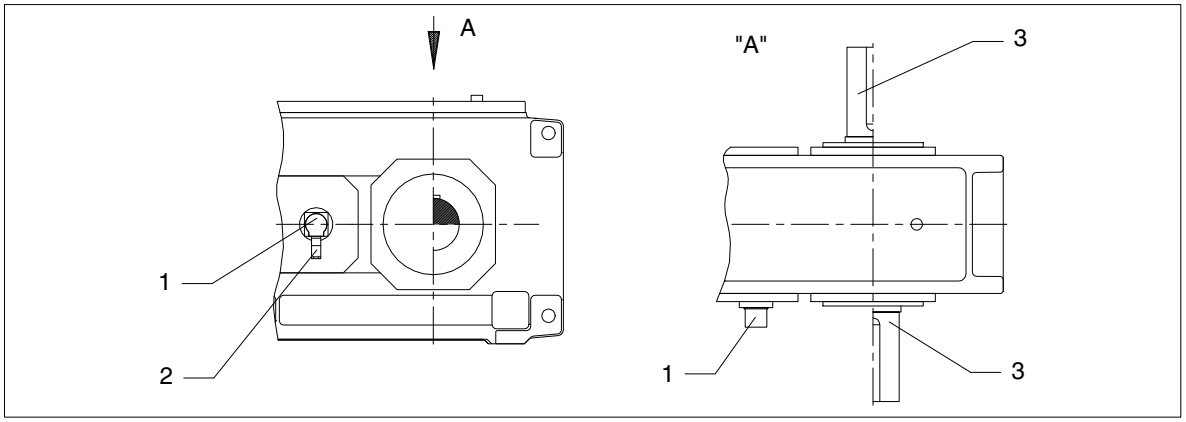

Fig. 37: Speed-monitoring device

1 Incremental transmitter 2 12-pole brass plug 3 Output

☞ When operating and servicing the components, observe the operating instructions relating to the components.
For technical data, refer to the data sheet and/or the list of equipment.

A detailed view of the gear unit can be obtained from the drawings in the gear-unit documentation.

5.16 Auxiliary drive

For certain applications the gear unit can, in addition to the main drive unit, be equipped with an auxiliary drive unit. This enables the main gear unit to be operated at a lower output speed in the same direction of rotation. The auxiliary drive is connected with the main gear unit by an overrunning clutch. For the basic drive arrangement, see figure 38.

Basic design of the gear unit with main and auxiliary drives

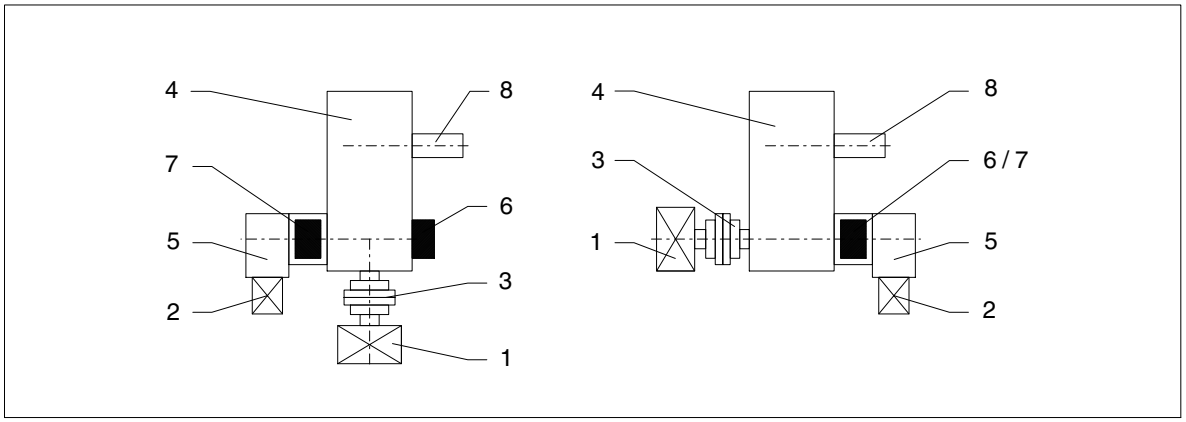

Fig. 38: Design of the gear unit with main and auxiliary drives

1	Main motor	4	Main gear unit	7	Overrunning clutch
2	Auxiliary motor	5	Auxiliary gear unit	8	Output shaft of the main gear unit
3	Coupling	6	Backstop		

Depending on use, two auxiliary drives of different capacities are available for each gear-unit size.

5.16.1 Auxiliary drive, designed as a maintenance drive

STOP **The auxiliary drive should be protected from overloads.**
The drive of the bucket elevator via the auxiliary drive must only be effected during idle running, i.e. without load.

For the exact designation of the geared motor as well as the mounting position, refer to the drawings (see section 1, "Technical Data"). The auxiliary gear unit has its own oil circulation system which is separated from that of the main gear unit. The auxiliary gear unit is already filled with oil when delivered.

STOP **Before connecting the motor, determine the direction of rotation of the three-phase current supply using a phase-sequence indicator, and connect the motor in accordance with the pre-determined direction of rotation.**
Observe the notice fixed to the gear unit.

☞ The Special operating instructions should be observed for operation of the auxiliary gear unit (Type KF MOTOX bevel-gear motor).

To avoid overspeeds in case of malfunctions of the overrunning clutch, the drive combination must be equipped with a speed-monitoring device by the customer for safety reasons. The speed-monitoring device consists of a pulse generator mounted in the intermediate flange (figure 39) and of an evaluating instrument.

☞ A threaded hole M12x1 for the pulse generator to be made available by the customer is provided at a suitable position in the intermediate flange. The dimension "**x**" depends on the instructions given by the equipment manufacturer (see figure 39). The pulse generator must satisfy the requirement "**suitable for flush mounting**".

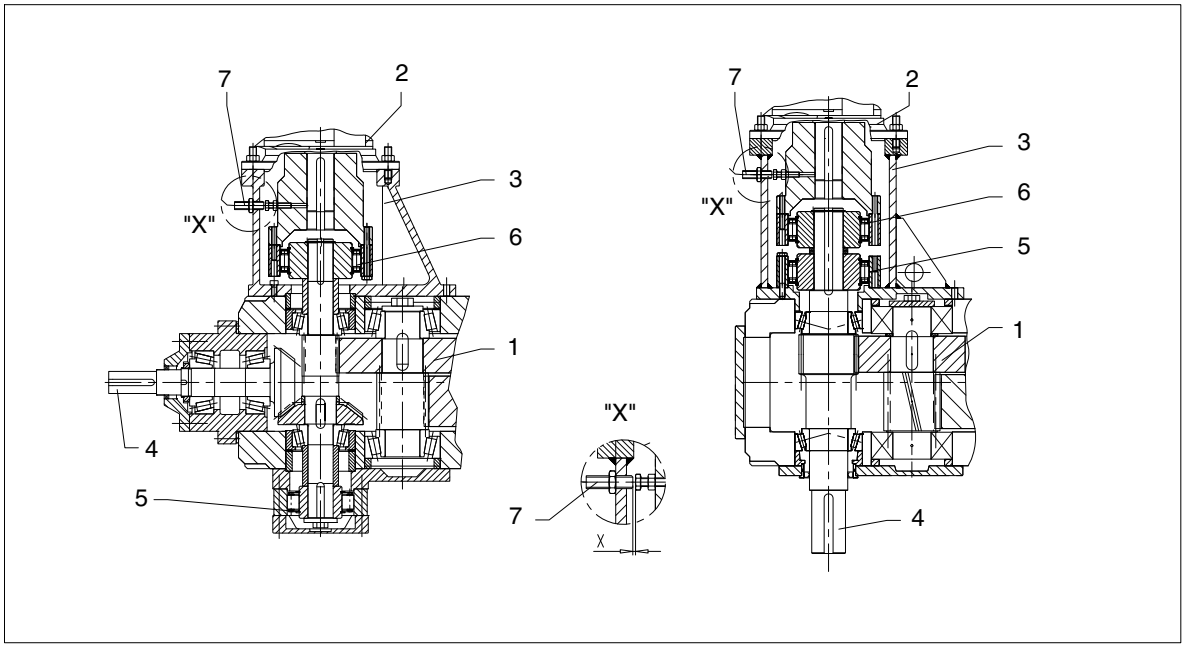

Fig. 39: Design of the gear unit with main and auxiliary drives

1	Main gear unit	4	Drive shaft of main gear unit	6	Overrunning clutch
2	Auxiliary gear unit	5	Backstop	7	Pulse generator for speed monitoring
3	Intermediate flange				

The speed-monitoring device must be connected in such a manner that the main drive is disabled automatically at **"> zero"** speed at the output shaft of the auxiliary drive. For safety reasons, the disabling function must be checked at regular intervals, i.e. at least quarterly. To check the disabling function, the auxiliary drive is switched on. If the speed-monitoring device connects - which can be verified, for instance, by means of a warning light - the speed-monitoring device is ready for operation.

STOP **This speed-monitoring device is an absolute must for safety reasons since in case of a defect in the overrunning system the auxiliary drive can be destroyed with explosive effect due to overspeeds.**

5.16.2 Auxiliary drive, designed as a load drive

Unlike the maintenance drive, type KF and KZ bevel-helical MOTOX gear units are used here for the auxiliary drive. The motors of the auxiliary drives are dimensioned in such a manner that a properly loaded conveyor system can be operated at low speed in the same direction of rotation.

☞ Furthermore the conditions set out in item 5.16.1 are applicable.

5.16.3 Overrunning clutch

If the gear unit is fitted with an auxiliary drive in addition to the main drive, coupling is realized by an overrunning clutch. This allows, when driving by the auxiliary drive, a torque transmission in one direction of rotation, while there is **"free-wheeling operation"** when driven by the main drive.

The output shaft of the main drive will rotate in the same direction of rotation both if the drive is effected via the main motor and via the auxiliary drive.

The overrunning clutch is mounted in an adapter flange and integrated in the oil circuit of the gear unit. Maintenance and oil change take place simultaneously with maintenance and oil change of the main drive.

The overrunning clutch is provided with centrifugally operated grippers. If the main gear unit is rotating in the specified direction of rotation, the inner ring will rotate together with the grippers, while the outer ring remains stationary. From a certain speed of rotation, the grippers will lift off and the overrunning clutch will operate without wear. If the drive is effected by the motor of the auxiliary drive via the outer ring, the overrunning clutch will be in **"carrier operation",** i.e. the main gear unit is turned over slowly in the chosen direction of rotation. At the same time, the drive shaft of the main gear unit and, if a flexible coupling is used between main motor and gear unit, possibly the main motor will rotate slowly along with it.

☞ The main motor and the motor of the auxiliary drive should be interlocked electrically in such a manner that only one of the two motors can be switched on.

☞ When driving via the auxiliary drive, the drive shaft of the main gear unit will rotate along simultaneously. This rotary motion **must not** be impeded. A brake arranged on the drive side in the main drive must be released if the drive is effected via the auxiliary drive.

STOP **When filling the main gear unit with oil, start by supplying lubricating point 1 at the intermediate flange with the oil quantity and oil grade specified on the rating plate. Prior to startup, the overrunning clutch should be checked for proper function according to item 7.2.4.**

6. Fitting

Observe the instructions in section 3, "Safety instructions"!

6.1 General information on fitting

When transporting the gear unit observe the notes in section 4, "Transport and storage".

Fitting work must be done with great care by authorised, trained and qualified personnel. The manufacturer cannot be held liable for damage caused by incorrect assembly and installation.

During the planning phase sufficient space must be allowed around the gear unit for later care and maintenance work.

☞ Free convection through the surface of the housing must be ensured by suitable measures.

If the gear unit is fitted with a fan, there should be sufficient space for air intake.

Adequate lifting equipment must be available before beginning the fitting work.

STOP **During operation the unit must not be allowed to heat up through exposure to heat from external sources such as sunlight, and suitable measures must be taken to prevent this!**
Such measures may be:

- **fitting a sunshade roof,**
  or
- **fitting an additional cooling unit,**
  or
- **fitting the oil sump with a temperature-monitoring device with a cut-out function.**

STOP **If a sunshade roof is fitted, heat must be prevented from building up!**
If a temperature-monitoring device is fitted, a warning signal must be emitted when the maximum permitted oil-sump temperature is reached. If the maximum permitted oil-sump temperature is exceeded, the drive must be shut off.
Such shutting off may cause the operator's system to stop!

STOP **The operator should ensure that no foreign bodies affect the proper function of the gear unit (e.g. falling objects or heaping over).**

No electrical welding work must be done at all on the drive.
The drives must not be used as an earthing point for welding operations. Toothed parts and bearings may be irreparably damaged by welding.

All the fastening points provided by the design of the unit must be used.
Screws which have been damaged during assembly or disassembly work must be replaced with new ones of the same strength class and type.

☞ To ensure proper lubrication during operation, the mounting position specified on the drawings must always be observed.

6.2 Unpacking

The products supplied are listed in the despatch papers. Check immediately on receipt to ensure that all the products listed have actually been delivered. Parts damaged and/or missing parts must be reported to Siemens in writing immediately.

☞ The packaging must not be opened or damaged, when this is part of the preservation method!

- Remove packaging material and transporting equipment and dispose of in accordance with regulations.
- Perform a visual check for any damage and contamination.

STOP **If there is any visible damage, the gear unit must not be put into operation. The instructions in section 4, "Transport and storage", must be observed.**

6.3 Installation of gear unit on housing base

6.3.1 Foundation

STOP **The foundation must be horizontal and level. The gear unit must not be excessively stressed when tensioning the fastening bolts.**

The foundation should be designed in such a way that no resonance vibrations are created and that no vibrations are transmitted from adjacent foundations. The structure on which the unit is to be mounted must be rigid. It must be designed according to the weight and torque, taking into account the forces acting on the gear unit.

Careful alignment with the units on the in- and output sides must be ensured. Any elastic deformation through operating forces must be taken into consideration.

STOP **Fastening bolts or nuts must be tightened to the prescribed torque. For the correct torque, refer to item 6.23. Bolts of the minimum strength class 8.8 must be used.**

If external forces are acting upon the gear unit, it is advisable to prevent the unit from displacement by means of lateral stops.

☞ For dimensions, space requirement and arrangement of supply connections, refer to the drawings in the gear-unit documentation.

6.3.2 Description of installation work

- Remove the anti-corrosion paint on the shafts with suitable cleaning agent such as benzine.

STOP **Do not allow the cleaning agent (e.g. benzine) to contact the shaft-sealing rings.**

⚠ **Ensure adequate ventilation. Do not smoke!**
Danger of explosion!

- Mount and secure input and output drive elements (e.g. coupling components) on the shafts.
  If these are to be heated before mounting, refer to the dimensioned drawings in the coupling documentation for the correct joining temperatures.

Unless otherwise specified, the components may be heated inductively, with a burner, or in a furnace.

⚠ **Take precautions to avoid burns from hot components!**

STOP **Protect shaft sealing rings from damage and heating to over + 100 °C (use heat-protective screens to protect against radiant heat.)**

The components must be pushed smartly onto the shaft up to the position specified in the order-specific dimensioned drawing.

Fit the coupling with the aid of suitable fitting equipment. The parts must not be driven on by abrupt force, as this may damage the gear unit (see also item 6.8).
The shaft-sealing rings and running surfaces of the shaft must not be damaged when pulling in the coupling parts.

When installing the drives, make absolutely certain that the individual components are accurately aligned in relation to each other. Inadmissibly large errors in the alignment of the shaft ends to be connected due to angular and/or axial misalignments result in premature wear and/or material damage.
Insufficiently rigid base frames or sub-structures can also during operation cause a radial and/or axial misalignment, which cannot be measured when the unit is at a standstill.

Gear units whose weight requires the use of lifting gear must be attached at the points shown in section 4, "Transport and storage". If the gear unit is to be transported with add-on parts, additional attachment points may be required. The position of these attachment points is shown in the order related dimensioned drawing.

6.3.2.1 Alignment surfaces, alignment thread

Preliminary alignment of the gear units (sizes 3 to 12) in a horizontal direction is done by the surfaces of the inspection and/or assembly cover.

Aligning surface: 

For the exact position of the aligning surfaces refer to the drawings in the gear-unit documentation.

The alignment surfaces are for aligning the gear unit horizontally, in order to ensure correct running of the gear unit.

The values punched into the alignment surfaces must always be observed.

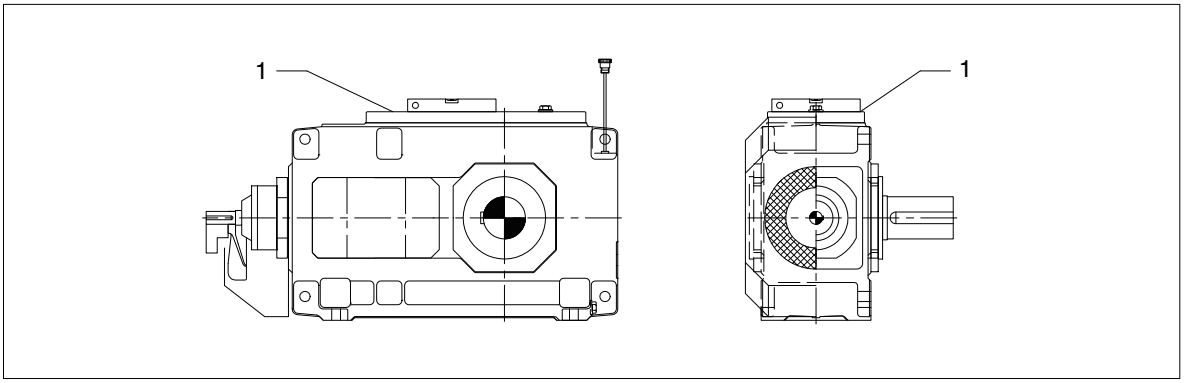

Fig. 40: Alignment surfaces on gear unit up to size 12

Gear units of sizes 13 to 22 have special alignment surfaces on the top of the housing for preliminary alignment of the gear units. To facilitate alignment of gear units of these sizes, alignment threads are provided in the housing base.

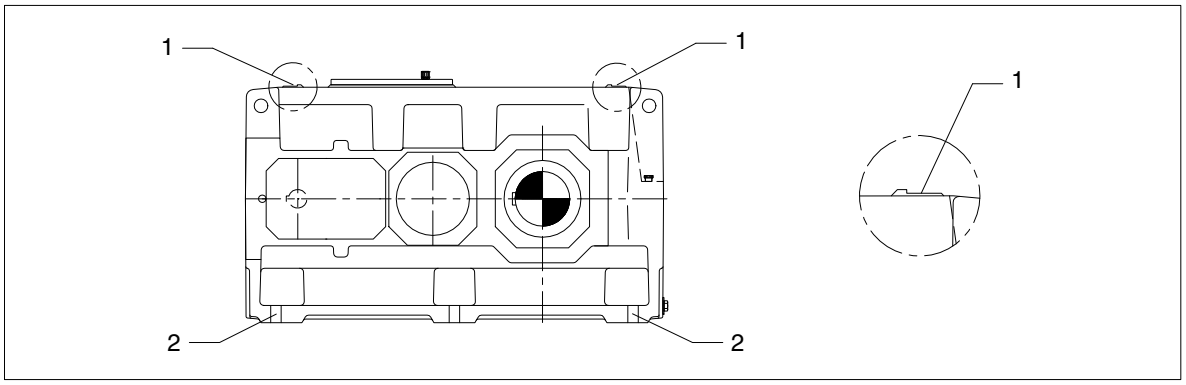

Fig. 41: Alignment surfaces on gear units from size 13

1 Alignment surfaces 2 Alignment thread

The final fine alignment with the assemblies on the in- and output side must be carried out accurately by the shaft axes, using:

- rulers
- spirit level
- dial gauge
- feeler gauge, etc.

Only then should the gear unit be fastened and afterwards the alignment be checked once again.

- Record alignment dimensions.

The report must be kept with these instructions.

The accuracy of shaft axis alignment is an important factor in determining the life span of shafts, bearings and couplings. If possible, the deviation should be zero (exception: ZAPEX couplings). For amongst others the special requirements for the couplings, refer to the specific operating instructions.

Non-observance can cause shaft rupture, resulting in serious injury or danger of life.

6.3.2.2 Mounting on a foundation frame

- Clean the undersurface of the gear-unit base.
- Using suitable lifting gear, place the gear unit on the foundation frame.
- Tighten the foundation bolts to the specified torque (see item 6.23); if necessary, use stops to prevent displacement.

The gear unit must not be excessively stressed when tensioning the fastening bolts.

- Align the gear unit exactly with the input and output units (see item 6.3.2.1).
- Record alignment dimensions.

The report must be kept with these instructions.

6.3.2.3 Mounting on a concrete foundation by means of stone bolts or foundation blocks

- Clean the undersurface of the gear-unit base.

Placing stone bolts:

- Hook stone bolts with washers and hexagon nuts into the foundation fastening points on the gear-unit housing (see figure 42).

STOP **The hexagon nuts must only be tightened when the concrete has set.**

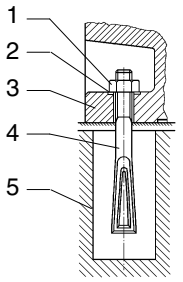

1 Hexagon nut
2 Washer
3 Gear-unit base
4 Stone bolt
5 Foundation

Fig. 42: Stone bolt

Placing the foundation blocks:

- Hook the foundation blocks with washers and fastening bolts into the foundation fastening points on the gear-unit housing (see figure 43).

STOP **The fastening bolts must only be tightened when the concrete has set.**

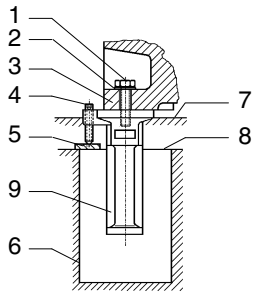

1 Fastening bolt
2 Washer
3 Gear-unit base
4 Threaded stud
5 Flat steel plate
6 Foundation
7 Final foundation height
8 Prepared foundation height
9 Foundation block

Fig. 43: Foundation block

- Using suitable lifting gear, place the gear unit on the concrete foundation.
- Align gear unit horizontally by in- and output shafts:
  - if using stone bolts, with shims,
  - if using foundation blocks, with the aid of the set screws (if available).
- If considerable forces may apply, use stops to prevent the unit from displacement.

☞ Before pouring the concrete foundation, fill up the openings in the foundation blocks with adequate material such as polystyrene.
With types **H1** and **H2**, remove the air-conducting cowl before tightening the foundation bolts and then bolt it back into position.

- Pour concrete into the recesses of the stone bolts or foundation blocks.

When the concrete has set, tighten the hexagon nuts of the stone bolts or fastening bolts of the foundation blocks to the specified torque (see item 6.23).

The gear unit must not be excessively stressed when tensioning the hexagon nuts or fastening bolts.

6.3.2.4 Mounting on a concrete foundation by means of anchor bolts

- Clean the undersurface of the gear-unit base.
- Place support on the base plate in the fine grout.
- Insert anchor bolts.
- Place pressure plates in position and screw nuts on.
- Pack the anchor bolts with wood so that they are about 10 mm from the upper edge of the support (see figure 44).

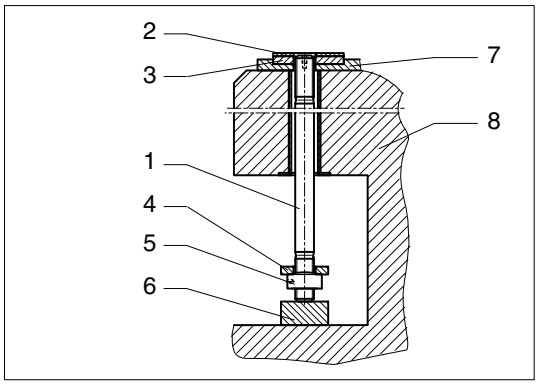

1 Anchor bolt
2 Support
3 Base plate
4 Pressure plate
5 Hexagon nut
6 Wood
7 Fine-grout concrete
8 Raw foundation

Fig. 44: Anchor bolt

- Place gear unit on foundation.

Use only the eyes provided to attach lifting equipment to the unit.
Do not use the front threads at the shaft ends to attach slinging equipment for the transport.

- Pull anchor bolts up (for this a bolt or threaded rod can be screwed into the thread on the front face).
- Fit washer.
- Unscrew hexagon nut a few turns by hand.
- Align gear unit with supports (see figure 45).
  - The values punched into the screeds must always be observed.
  - Alignment tolerances in relation to the units on the input and output sides are to be in accordance with the permissible angular and axial displacements of the couplings (see coupling drawings).
  - The alignment values must be recorded.

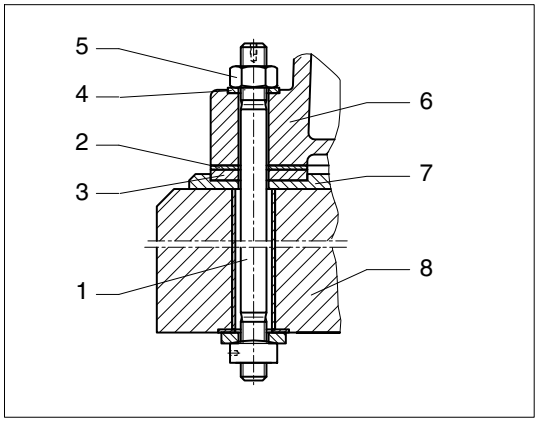

1 Anchor bolt
2 Support
3 Base plate
4 Washer
5 Hexagon nut
6 Housing base
7 Fine-grout concrete
8 Raw foundation

Fig. 45: Anchor bolt

Prior to tensioning the anchor bolts, the fine-grout concrete must have set for at least 28 days.

- Keep anchor bolts in their position by tightening the nut with your fingers.
- Place the protective sleeve.
- Place hydraulic tensioning device in position.
- Initially tension the bolts alternately (for initial tensioning forces, see item 6.23).
- Using a suitable tool, screw hexagon nuts on as far as the stop.

To ensure correct handling and adjustment of the pretensioning tool, the manufacturer's operating instructions must be adhered to.

The tensioning pressures and/or the initial tensioning forces should be recorded (see also item 7.2.9).

6.4 Assembly of a shaft-mounting gear unit with hollow shaft and parallel keyway

The end of the driven-machine shaft (material C60+N or higher strength) must be provided with a parallel key to DIN 6885 Part 1 Form A. Furthermore, a centring hole to DIN 332 Form DS (tapped) should be provided (for the connection dimensions of the driven machine shaft, see dimensioned drawing in the gear unit documentation).

6.4.1 Preparatory work

To facilitate demounting (see also item 6.4.3), we recommend providing a connection for pressure oil on the end of the driven machine shaft. For this a hole must be drilled through to the hollow shaft bore (see figure 46). This connection may also be used for supplying rust-releasing agent.

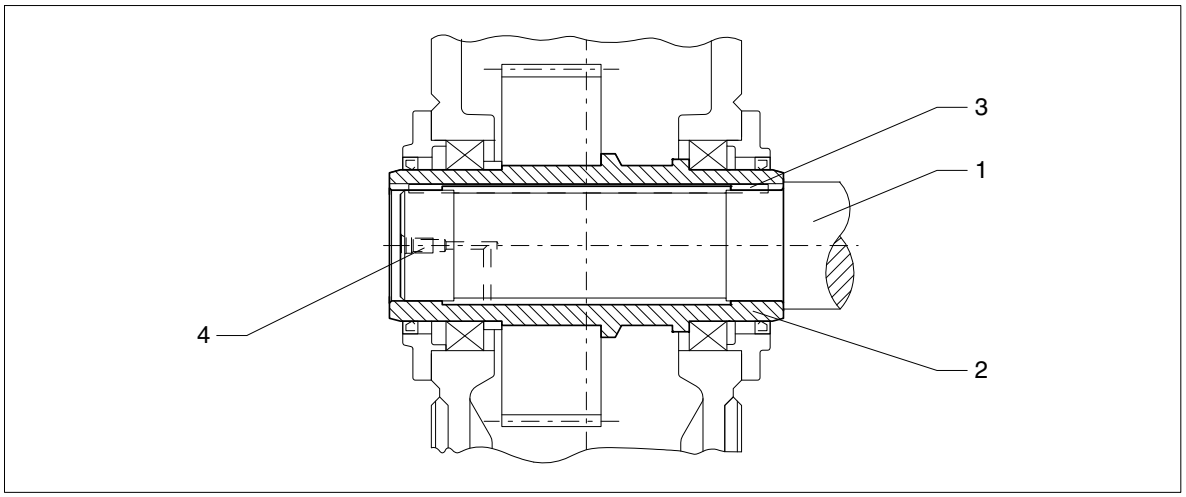

Fig. 46: Hollow shaft with parallel keyway, preparation

1 Machine shaft
2 Hollow shaft
3 Parallel key
4 Pressure oil connection

6.4.2 Fitting

- Remove the preservative agent from the hollow shaft and the machine shaft with a suitable cleaning agent (such as benzine).

Do not allow the cleaning agent (e.g. benzine) to contact the shaft-sealing rings.

Ensure adequate ventilation. Do not smoke!
Danger of explosion!

- Check the hollow and machine shafts to ensure that seats and edges are not damaged. If necessary, rework the parts with a suitable tool and clean them again.

Coat with a suitable lubricant to prevent frictional corrosion of the contact surfaces.

6.4.2.1 Fitting

- Fit the gear unit by means of nut and threaded spindle. The counterforce is provided by the hollow shaft.

The hollow shaft must be exactly aligned with the machine shaft to avoid canting.

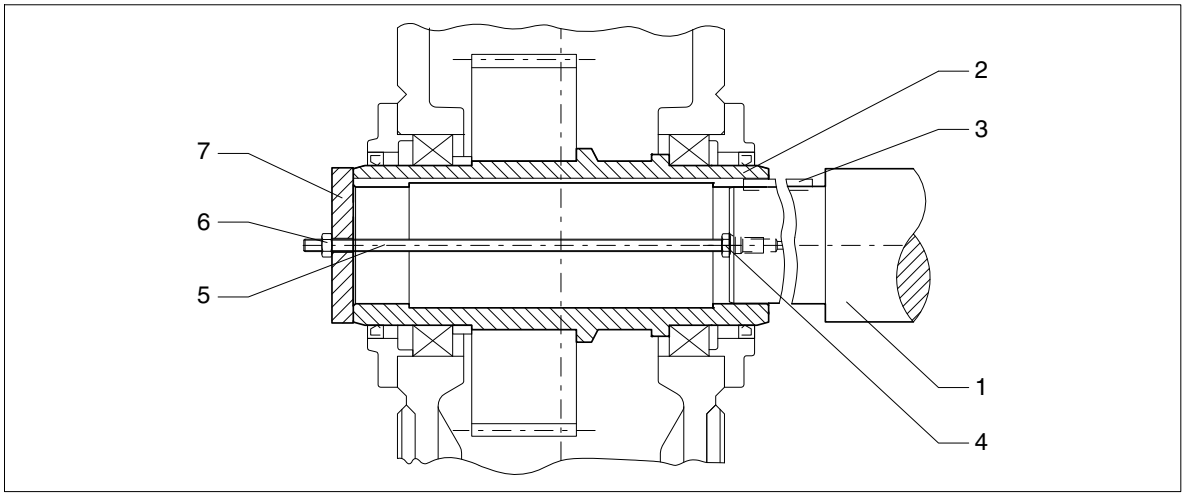

Fig. 47: Hollow shaft with parallel keyway, mounting with threaded spindle

1	Machine shaft	4	Nut	7	End plate
2	Hollow shaft	5	Threaded spindle		
3	Parallel key	6	Nut		

Instead of the nut and threaded spindle shown in the diagram, other types of equipment such as a hydraulic lifting equipment (type ”Lukas”) may be used.

The hollow shaft may be tightened against a machine-shaft collar only if the gear-unit configuration is one of the following:

– Torque arm
– Support with gear-unit swing base

With a different arrangement the bearings may be excessively stressed during the mounting procedure.

6.4.2.2 Axial fastening

Depending on type, secure the hollow shaft axially on the machine shaft (e.g. with locking ring, end plate, set screw).

6.4.3 Demounting

- Remove the axial securing device from the hollow shaft.
- If frictional corrosion has occurred on the seating surfaces, rust-releasing agent may be used in order to facilitate forcing off the gear unit. The rust releaser can be injected through the pressure-oil connection (see figure 46), e.g. using a pump.
- When the rust-releasing agent has taken effect, pull the gear unit off with the device (see figures 48 and 49).
- Removing the gear unit from the driven-machine shaft can be done locally as follows:
  - using forcing screws in an end plate (see figure 49) or
  - using a central threaded spindle or
  - preferably using a hydraulic lifting unit ("Lukas").

☞ The end plate and/or the auxiliary plate for forcing off the gear unit are not included in our delivery.
Each of the two end faces of the hollow shaft is provided with 2 threaded holes (for dimensions, see figure 50) to receive bolts for fastening the end plate to the hollow shaft.

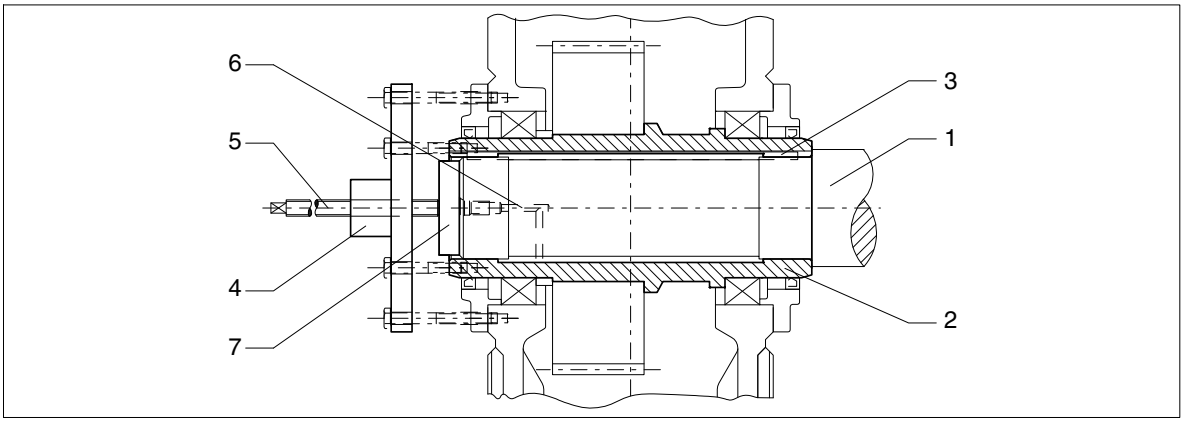

Fig. 48: Hollow shaft with parallel keyway, demounting with hydraulic lifting equipment ("Lukas")

1 Machine shaft
2 Hollow shaft
3 Parallel key
4 Hydraulic lifting unit ("Lukas")
5 Threaded spindle
6 Pressure oil connection
7 Plate for forcing out

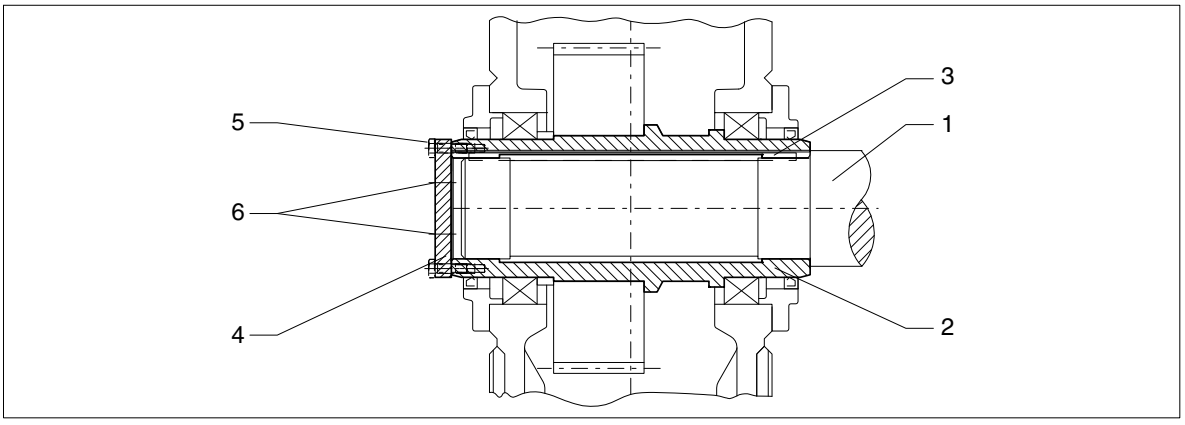

Fig. 49: Hollow shaft with parallel keyway, demounting with end plate

1 Machine shaft
2 Hollow shaft
3 Parallel key
4 End plate for forcing out
5 Screws
6 Forcing screws

STOP **Avoid canting when pulling the unit off.**

The plate for forcing-out is not included in our delivery.

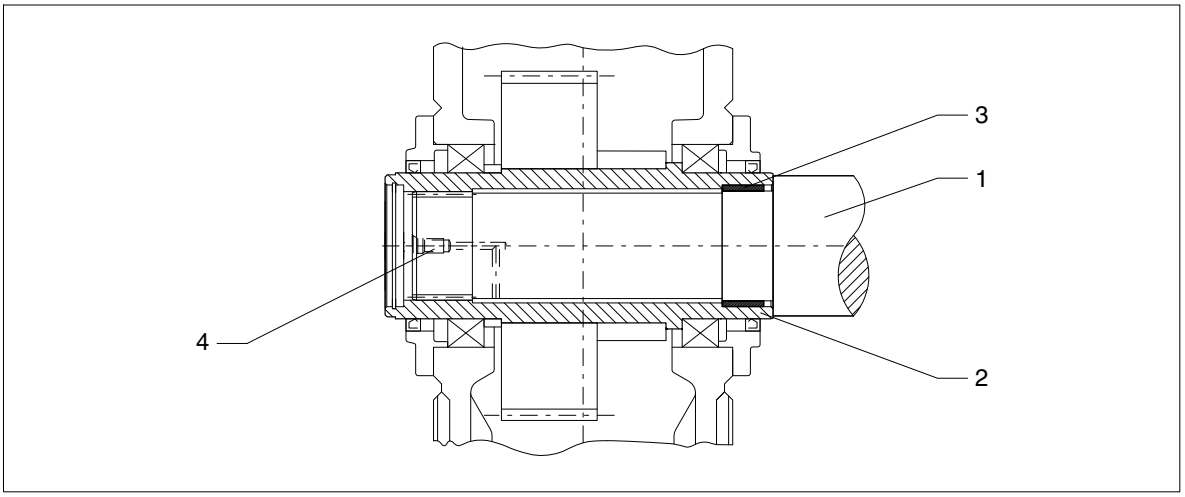

Fig. 50: Hollow shaft with parallel keyway

*) 2 threads offset 180°

Table 15: Threaded holes on the end faces of the gear-unit hollow shafts

Gear-unit size	**m** mm	**s**	**t** mm	**Gear-unit size**	**m** mm	**s**	**t** mm
4	95	M 8	14.5	12	215	M 12	19.5
5	115	M 8	14.5	13	230	M 12	19.5
6	125	M 8	14.5	14	250	M 12	19.5
7	140	M 10	17	15	270	M 16	24
8	150	M 10	17	16	280	M 16	24
9	160	M 10	17	17	300	M 16	24
10	180	M 12	19.5	18	320	M 16	24
11	195	M 12	19.5	19 ... 22	on request		

STOP

If the counterforce is provided not only by the hollow shaft, but also by the housing, as shown in figure 48, the forces used must not exceed the values given in the following table 16.

Table 16: Maximum forcing pressures

Gear-unit size	**Maximum forcing pressure** N	**Gear-unit size**	**Maximum forcing pressure** N
4	22600	12	113600
5	33000	13	140000
6	37500	14	160000
7	50000	15	193000
8	56000	16	215000
9	65000	17	240000
10	82000	18	266000
11	97200	19 ... 22	on request

STOP

If the above values are exceeded, the housing, the hollow-shaft bearings or other gear components may be irreparably damaged. Before replacing the gear unit on the machine shaft, always check the bearings for any signs of damage.

When using forcing screws or threaded spindles, the head of the thread pressing against the driven machine should be rounded and well greased to reduce the risk of seizing at this point.

6.5 Shaft-mounting gear unit with hollow shaft and internal spline to DIN 5480

The shaft end of the driven machine must be designed with internal splines to DIN 5480. Furthermore, a centring hole to DIN 332 Form DS (tapped) should be provided (for the connection dimensions of the driven machine shaft, see dimensioned drawing in the gear unit documentation).

6.5.1 Preparatory work

To facilitate demounting (see also item 6.4.3), we recommend providing a connection for pressure oil on the end of the driven machine shaft. For this a hole must be drilled through to the hollow shaft bore (see figure 51). This connection may also be used for supplying rust-releasing agent.

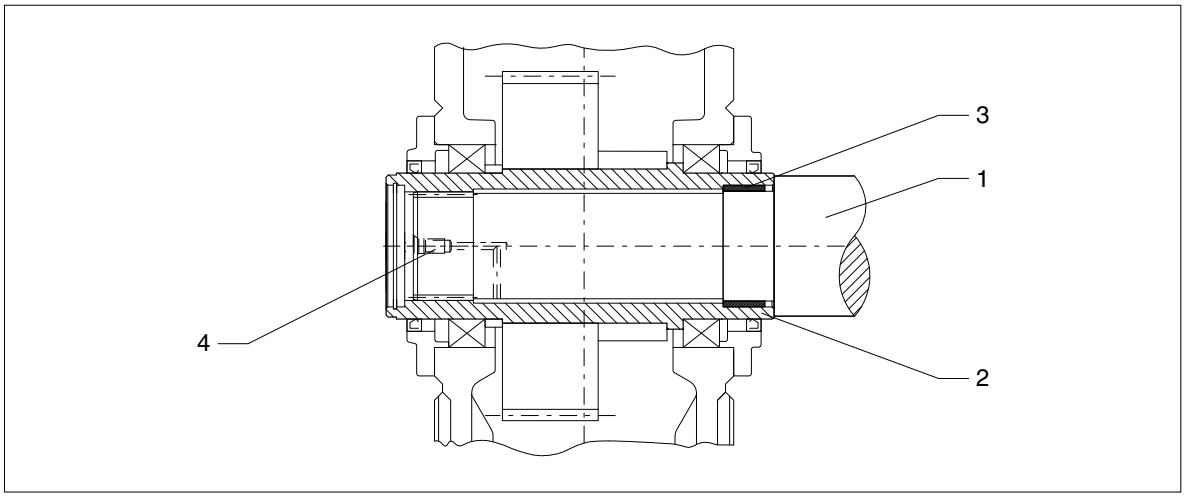

Fig. 51: Hollow shaft with internal spline, preparation

1	Machine shaft	3	DU bush
2	Hollow shaft	4	Pressure oil connection

6.5.2 Fitting

- Remove the preservative agent from the hollow shaft and the machine shaft with a suitable cleaning agent (such as benzine).

STOP **Do not allow the cleaning agent (e.g. benzine) to contact the shaft sealing rings.**

Ensure adequate ventilation. Do not smoke!
Danger of explosion!

- Check the hollow and machine shafts to ensure that seats, teeth or edges are not damaged. If necessary, rework the parts with a suitable tool and clean them again.

Coat with a suitable lubricant to prevent frictional corrosion of the contact surfaces.

6.5.2.1 Fitting with integrated DU bush

- Fit the gear unit by means of threaded spindle and nut. The counterforce is provided by the hollow shaft.

The hollow shaft must be exactly aligned with the machine shaft to avoid canting. When fitting, ensure that the position of the teeth between the machine shaft and hollow shaft is correct. The correct position can be determined by turning the input shaft and/or by swivelling the gear unit lightly around the hollow shaft.

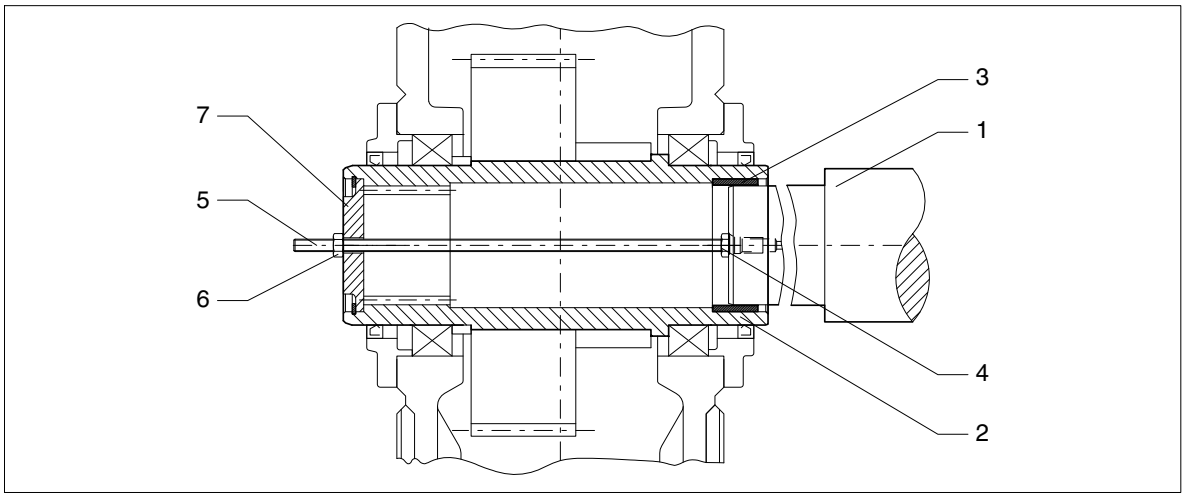

Fig. 52: Hollow shaft with internal spline, mounting with DU bush

1	Machine shaft	4	Nut	7	End plate
2	Hollow shaft	5	Threaded spindle		
3	DU bush	6	Nut		

6.5.2.2 Fitting with loose DU bush

The loose DU bush is pushed onto the machine shaft, fixed rigidly in position with a locating tie and then pulled into the hollow shaft along with the machine shaft (see figure 52).

The hollow shaft must be exactly aligned with the machine shaft to avoid canting. When fitting, ensure that the position of the teeth between the machine shaft and hollow shaft is correct. The correct position can be determined by turning the input shaft and/or by swivelling the gear unit lightly around the hollow shaft.

Instead of the nut and threaded spindle shown in the diagram, other types of equipment such as a hydraulic lifting equipment (type "Lukas") may be used.

The hollow shaft may be tightened against a machine-shaft collar only if the gear-unit configuration is one of the following:

- **Torque arm**
- **Support with gear-unit swing base**

With a different arrangement the bearings may be excessively stressed.

6.5.2.3 Axial fastening

Depending on type, secure the hollow shaft axially on the machine shaft (e.g. with locking ring, end plate, set screw).

6.5.3 Demounting

- Remove the axial securing device from the hollow shaft.
- If frictional corrosion has occurred on the seating surfaces, rust-releasing agent may be used in order to facilitate forcing off the gear unit. The rust releaser can be injected through the pressure-oil connection (see figure 53), e.g. using a pump.
- The end plate and the locking ring must first be removed.
- When the rust-releasing agent has taken effect, pull the gear unit off with the device (see figures 53 and/or 54).
- Removing the gear unit from the driven-machine shaft can be done locally as follows:
  - using forcing screws in an end plate (see figure 54) or
  - using a central threaded spindle or
  - preferably using a hydraulic lifting unit ("Lukas").

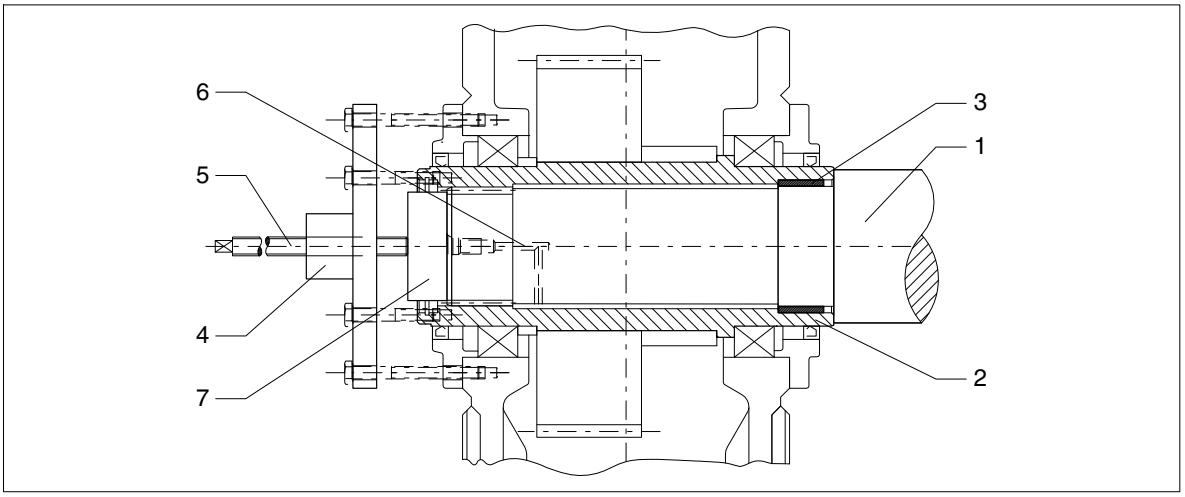

Fig. 53: Hollow shaft with internal spline, demounting with hydraulic lifting equipment (“Lukas”)

1 Machine shaft
2 Hollow shaft
3 DU bush
4 Hydraulic lifting equipment ("Lukas")
5 Threaded spindle
6 Pressure oil connection
7 Plate for forcing out

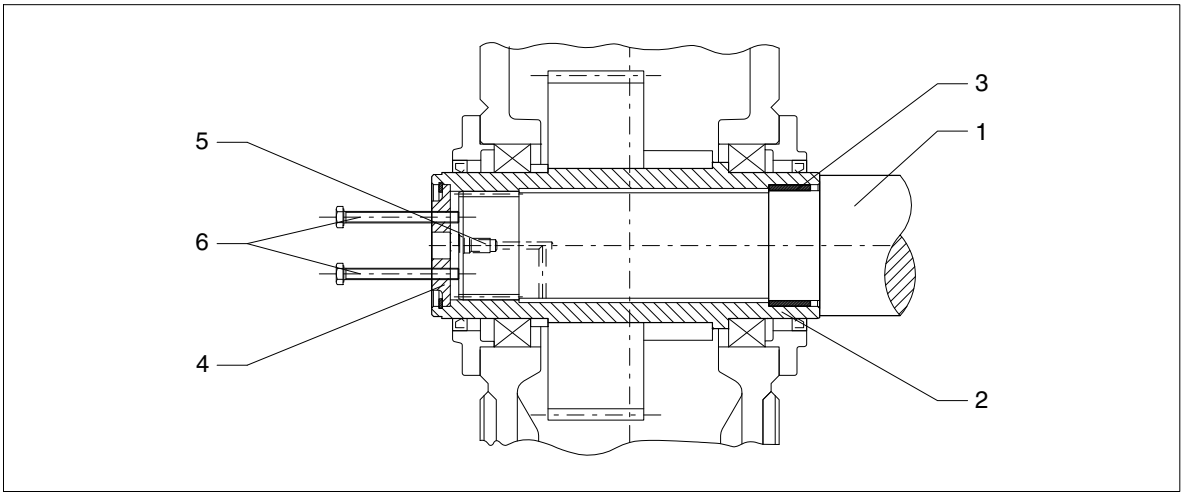

Fig. 54: Hollow shaft with internal spline, demounting with end plate

1 Machine shaft
2 Hollow shaft
3 DU bush
4 End plate
5 Pressure oil connection
6 Forcing screws

Avoid canting when pulling the unit off.

The plate for forcing-out is not included in our delivery.

If the counterforce is provided not only by the hollow shaft, but also by the housing, as shown in figure 53, the forces used must not exceed the values given in the following table 17.

Table 17: Maximum forcing pressures

Gear-unit size	Maximum forcing pressure N	Gear-unit size	Maximum forcing pressure N
4	22600	12	113600
5	33000	13	140000
6	37500	14	160000
7	50000	15	193000
8	56000	16	215000
9	65000	17	240000
10	82000	18	266000
11	97200	19 ... 22	on request

If the above values are exceeded, the housing, the hollow-shaft bearings or other gear components may be irreparably damaged. Before replacing the gear unit on the machine shaft, always check the bearings for any signs of damage.

When using forcing screws or threaded spindles, the head of the thread pressing against the driven machine should be rounded and well greased to reduce the risk of seizing at this point.

6.6 Shaft-mounting gear unit with hollow shaft and shrink disk

The end of the driven machine shaft (material C60+N or higher strength) should have a centring means to DIN 332 Form DS (with thread) in its end face (for connecting dimensions of the driven machine shaft, see dimensioned drawing in the gear-unit documentation).

6.6.1 Fitting

- Remove the preservative agent from the hollow shaft and the machine shaft with a suitable cleaning agent (such as benzine).

Do not allow the cleaning agent (e.g. benzine) to contact the shaft sealing rings.

Ensure adequate ventilation. Do not smoke.
Danger of explosion!

- Check the hollow and machine shafts to ensure that seats and edges are not damaged. If necessary, rework the parts with a suitable tool and clean them again.

The bore of the hollow shaft and the machine shaft must be absolutely free of grease in the area of the shrink disk seat.
This is essential for safe and reliable torque transmission.
Do not use contaminated solvents or dirty cloths for removing grease.

6.6.1.1 Fitting with integrated DU bush

- Fit the gear unit by means of nut and threaded spindle. The counterforce is provided by the hollow shaft.

The hollow shaft must be exactly aligned with the machine shaft to avoid canting.

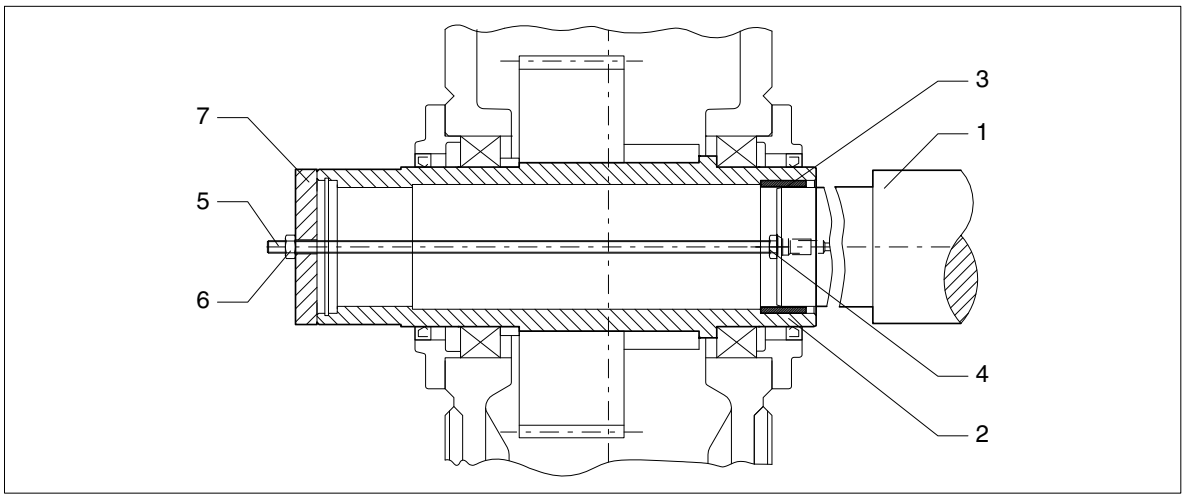

Fig. 55: Hollow shaft in shrink-disk design, mounting with DU bush

1	Machine shaft	4	Nut	7	End plate
2	Hollow shaft	5	Threaded spindle		
3	DU bush	6	Nut		

6.6.1.2 Fitting with loose DU bush

The loose DU bush is pushed onto the machine shaft, fixed rigidly in position with a locating tie and then pulled into the hollow shaft along with the machine shaft (see figure 55).

The hollow shaft must be exactly aligned with the machine shaft to avoid canting.

Instead of the nut and threaded spindle shown in the diagram, other types of equipment such as a hydraulic lifting equipment (type "Lukas") may be used.

The hollow shaft may be tightened against a machine-shaft collar only if the gear-unit configuration is one of the following:

- **Torque arm**
- **Support with gear-unit swing base**

With a different arrangement the bearings may be excessively stressed.

6.6.1.3 Axial fastening

If the shrink disk is fitted according to instructions (see item 6.6), the gear unit is fixed securely in the axial direction. Additional fastening is not required.

6.7 Shrink disk

The shrink disk realizes a press fit connection between a hollow shaft and a stub/machine shaft (in the following called "stub shaft"). The interference fit can transfer torques, bending moments and forces. The jointing pressure between the hollow and stub shafts generated by the shrink disk is essential for the torque and force transmission.

The shrink disk is delivered ready for installation.

The shrink disk must not be dismantled before mounting for the first time.

Mounting and start-up must be carried out by properly trained specialist personnel. Prior to start-up these instructions must be read, understood and adhered to. We accept no liability for personal injury or damage due to non-observance.

6.7.1 Fitting the shrink disk

- Before beginning installation, the hollow shaft and the stub shaft must be carefully cleaned.

Observe manufacturer's instructions for handling lubricants and solvents.

Do not allow cleansing agent or solvent to affect surfaces with paint coating.

The bore of the hollow shaft and the stub shaft must be absolutely clean, free of grease and oil in the area of the shrink disk seat.
This is essential for safe and reliable torque transmission.
Do not use contaminated solvents or dirty cloths nor cleansing agents containing oil (such as paraffin or terpentine) for removing grease.

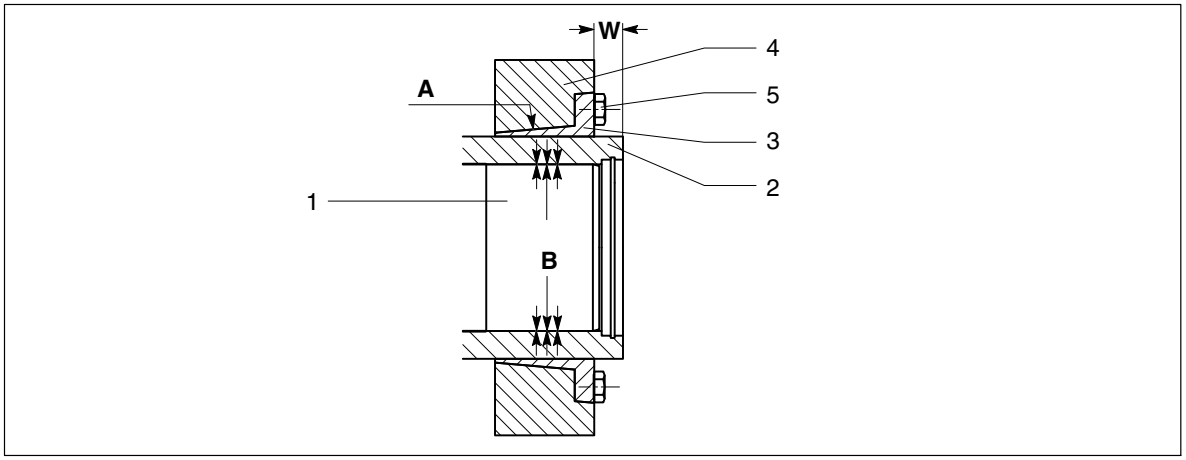

Fig. 56: Fitting the shrink disk

A	Greased	**B**	Absolutely grease- and oil-free	**W**	Installation height
1	Stub shaft	3	Inner ring	5	Tensioning bolt
2	Hollow shaft	4	Outer ring		

The outer surface of the hollow shaft must be lightly greased in the area of the shrink disk seat.

For a detailed view, refer to the dimensioned drawing in the gear-unit documentation.

- Place the shrink disk on the hollow shaft and fasten, if required. For the exact installation height (W) of the shrink disk, refer to the dimensioned drawing.

For transporting and lifting the shrink disk it may be required to use a suitable lifting device!

Make sure that the shrink disk cannot slip off the hollow shaft.

Do not tighten the tensioning bolts (5) until the stub shaft is installed too.

- Tighten the tensioning bolts (5) gradually one after the other, working round several times by quarter turns.
- Tighten all tensioning bolts (5) until the end faces of the inner ring (3) and the outer ring (4) are flush and the maximum tightening torque of the tensioning bolts has been achieved. The correct alignment is to be checked using a ruler. The max. tolerance is ± 0.2 mm.

The correct clamping condition can thus be checked visually.

To avoid overloading the individual bolts, the maximum tightening torque (see table 18) must not be exceeded. If, when tightening the clamping bolts at max. tightening torque, the inner and outer ring are not aligned, Siemens must be consulted.

Table 18: Maximum torques for tensioning bolts

Tensioning-bolt thread	max. tightening torque per bolt Strength class 12.9 Nm	**Tensioning-bolt thread**	max. tightening torque per bolt Strength class 12.9 Nm
M 8	35	M 20	570
M 10	70	M 24	980
M 12	120	M 27	1450
M 14	193	M 30	1970
M 16	295	M 33	2650

The shrink disk has been identity-marked on the outer ring (4). In case of contacting Siemens this identification must be referred to.

For safety reasons, a protective cover should be mounted to prevent contact! This cover must be applied after completion of all works on the shrink disk.

Only the complete shrink disks supplied by the manufacturer may be used. Combining of components from different shrink disks is not permitted.

Tightening the fastening bolts using an impact screwdriver is not permitted!

6.7.2 Demounting the shrink disk

- Remove the protective cover.
- Remove any rust deposits from the shaft and the hollow shaft.

Under no circumstances must the tensioning bolts be unscrewed one after the other.

- Undo all tensioning bolts one after the other by approx. 1/4 turn.

The stored energy of the outer ring is slowly loosened during disassembly via the bolts to be loosened. In order that this is carried out correctly, the procedure described here must be carefully adhered to!

- All tensioning bolts should now be further loosened one after the other by approx. 1 turn.

The outer ring should now release of its own accord from the inner ring. If this is not the case, the outer ring can be detensioned with the forcing threads. To this purpose screw some of the adjacent fastening bolts into the forcing threads. The now loosening outer ring is braced against the remaining bolts. This operation must be carried out until the outer ring completely releases of its own accord.

- The shrink disk is to be secured against axial shifting.
- Draw the stub shaft out of the hollow shaft.
- Pull the shrink disk off the hollow shaft.

For transporting and lifting the shrink disk it may be required to use a suitable lifting device!

6.7.3 Cleaning and greasing the shrink disk

Only dirty shrink disks must be disassembled and cleaned.

- Inspection of all parts for any damage.

Damaged parts must be replaced with new ones! The use of damaged parts is not permissible!

Only the complete shrink disks supplied by the manufacturer may be used. Combining of components from different shrink disks is not permitted.

- Thoroughly clean all parts.

Do not use contaminated solvents or dirty cloths nor cleansing agents containing oil (such as paraffin or terpentine) for removing grease.

- The conical surfaces of the inner and outer rings (3 and 4, see figure 56) must be free of grease and oil.
  - A thin layer of grease must be applied evenly to the conical surfaces of the inner and outer rings (3 and 4, see figure 56).
  - Provide the tensioning bolts (5, see figure 56) on the contact surface and on the thread with lubricant.

– Use a solid lubricant paste with a **high MoS_2-based molybdenum disulphide content** which will not slide during fitting work and which shows the following characteristics:

  – friction coefficient “μ” = 0.04

  – resistant to pressure up to a maximum pressure of 300 N/mm^2

  – ageing-resistant

Table 19: Recommended lubricants for shrink disks after their cleaning [1)]

Lubricant	Form	Manufacturer
Molykote G Rapid	Spray or paste	DOW Corning
Aemasol MO 19 P	Spray or paste	A. C. Matthes
Unimoly P 5	Powder	Klüber Lubrication
gleitmo 100	Spray or paste	Fuchs Lubritec

[1)] Other lubricants may be used if they have the same characteristics.

- Join inner ring (3) and outer ring (4).
- Place the tensioning bolts and screw in some threads by your fingers.

STOP **Observe the manufacturer’s instructions for handling lubricants!**

Mounting and start-up must be carried out by properly trained specialist personnel.

6.7.4 Re-mounting the shrink disk

☞ For re-mounting the shrink disk the procedure described in item 6.7.1 must be adhered to.

6.7.5 Inspection of the shrink disk

☞ In all cases the inspection relating to the shrink disk should be carried out simultaneously with the examination of the gear unit, **however at least every 12 months**.

Inspection of the shrink disk is limited to a visual assessment of its condition. The following must be observed when carrying out this work:

– loose screws

– damage caused by force

– flush position of the inner ring (3) in relation to outer ring (4).

6.8 Couplings, clutches

As a rule, flexible couplings or safety slip clutches are provided for the drive of the gear unit.

If rigid couplings or other in- and/or output elements, which create additional radial and/or axial forces, (e.g. gear wheels, belt pulleys, disk flywheels, hydraulic couplings) are to be used, this must be agreed by contract.

STOP **Couplings must be balanced in accordance with the specifications in the pertinent instructions manual!**

☞ For maintenance and operation of the couplings, refer to the specific operating instructions for the couplings.

STOP **When installing the drives, make absolutely certain that the individual components are accurately aligned in relation to each other. Inadmissibly large errors in the alignment of the shaft ends to be connected due to angular and/or axial misalignments result in premature wear and/or material damage.**
Insufficiently rigid base frames or sub-structures can also during operation cause a radial and/or axial misalignment, which cannnot be measured when the unit is at a standstill.

☞ For permissible alignment errors in the case of couplings supplied by Siemens, refer to the operating instruction manuals for the couplings.
If you use couplings manufactured by other manufacturers, ask these manufacturers which alignment errors are permissible, stating the radial loads occurring.

☞ Increased system service life and reliability and reduced running noise can be achieved through the least possible radial and angular misalignment.

The coupling parts may get out of alignment

- by imprecise alignment during assembly or installation
- during operation of the system by:
  - heat expansion,
  - shaft flexure,
  - too weak machine frames and the like.

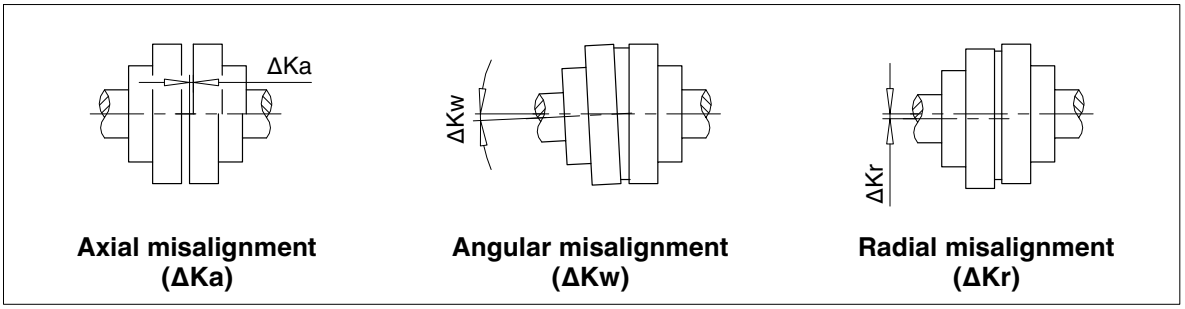

Fig. 57: Possible misalignments

Alignment has to be done in two axial planes arranged perpendicularly to each other. This can be done by means of a ruler (radial misalignment) and feeler gauge (angular misalignment), as shown in the illustration. The aligning accuracy can be increased by using a dial gauge or a laser alignment system.

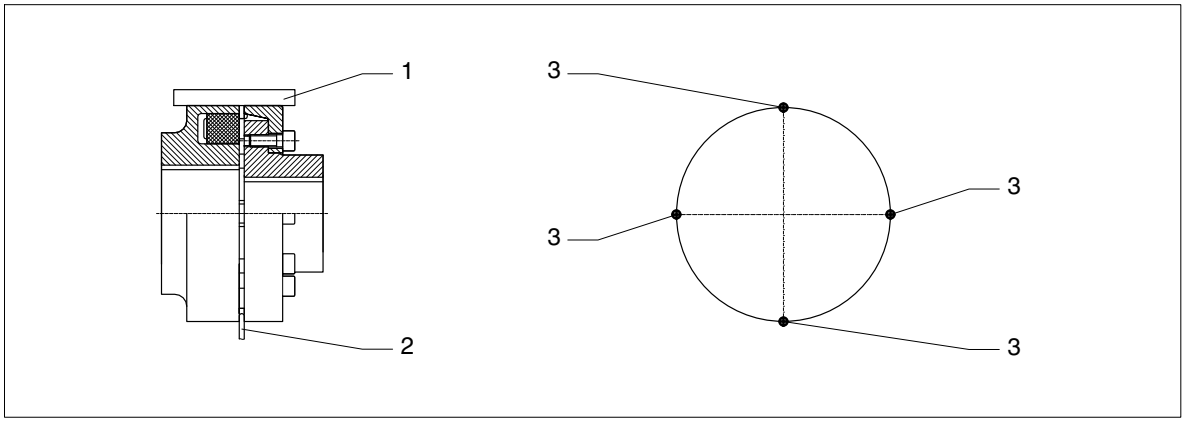

Fig. 58: Example of alignment on a flexible coupling

1 Ruler 2 Feeler gauge 3 Measuring points

STOP **The maximum permissible misalignment values are specified in the operating instructions for the coupling; they must under no circumstances be exceeded during operation.**
Angular and radial misalignments may occur at the same time. The sum of both misalignments must not exceed the maximum permissible value of the angular or radial misalignment.
If you use couplings manufactured by other manufacturers, ask these manufacturers which alignment errors are permissible, stating the radial loads occurring.

☞ For alignment of the drive components (vertical direction), it is recommended to use packing or foil plates underneath the mounting feet. The use of claws with set screws on the foundation for lateral adjustment of the drive components is also advantageous.

In the case of gear units with hollow output shafts or flange output shafts, the coupling on the output side is not required. Gear units with hollow output shafts must be mounted on the shafts of the customer's machinery. Gear units with flanged output shafts must be mounted on the customer's shaft via a counterflange.

6.9 Shaft-mounting gear unit with flanged shaft

STOP **The front area of the flanged shaft must be absolutely free of grease.**
This is essential for safe and reliable torque transmission. Do not use contaminated solvents or dirty cloths for removing grease.

STOP **Before tightening the tensioning bolts it must be ensured that the flange centring means are inserted one inside the other.**
Then tighten diametrically opposed tensioning bolts to full torque.

Tightening torques of flange bolts for gear units:

Table 20: Tightening torques for flange connections

Gear-unit size	Strength class		Tightening torque
	Bolt DIN 931	Nut DIN 934	
5 ... 6	10.9	10	610 Nm
7 ... 10	10.9	10	1050 Nm
11 ... 16	10.9	10	2100 Nm
17 ... 20	10.9	10	3560 Nm
21 ... 22	10.9	10	5720 Nm

6.10 Shaft mounting gear unit with block flange

The front area of the block flange must be absolutely free of grease.
This is essential for safe and reliable torque transmission. Do not use contaminated solvents or dirty cloths for removing grease.

Tighten diametrically opposed tensioning bolts to full torque.

The joint bolts must be tightened to the prescribed torque. For the correct torque, refer to item 6.23. Bolts of the minimum strength class 8.8 must be used. The transmittable gear-unit torque is limited by the bolted joint on bolt circle K_1.

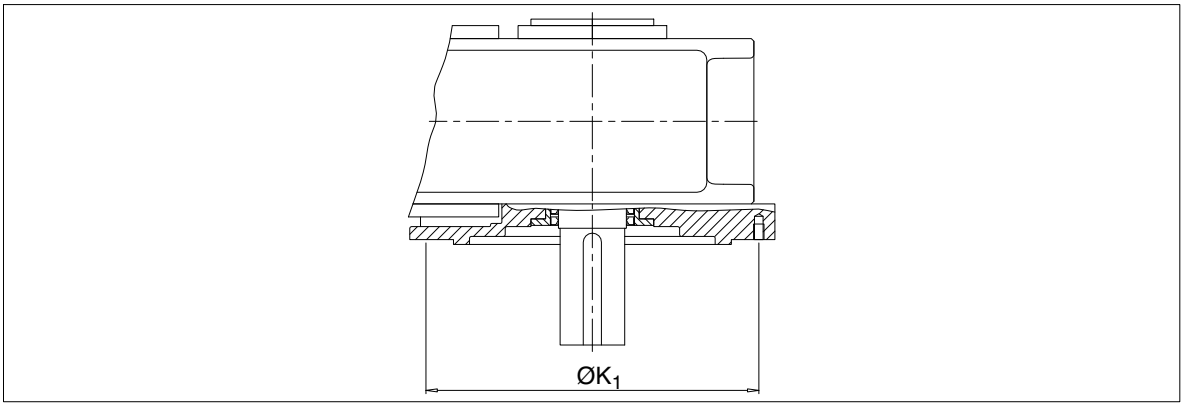

Fig. 59: Illustration with block flange

Table 21: Types and rotation directions

Type	Type [1] B	Type [1] C
H2..	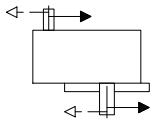	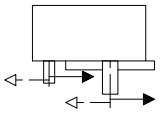
H3..	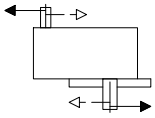	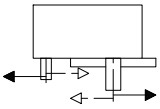
H4..	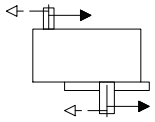	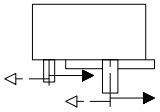
B2..	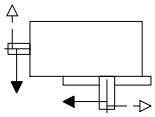	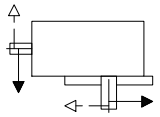
B3..	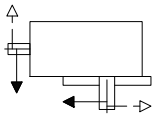	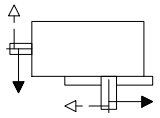
B4..	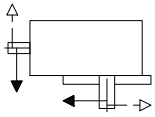	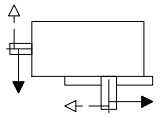

[1] Types with hollow output shaft on request

6.11 Mounting the torque arm for the gear-unit housing

6.11.1 Attaching the torque arm

The torque arm must be mounted stress-free on the machine side

On helical gear units with a motor bell housing the torque arm is located opposite the motor bell housing.

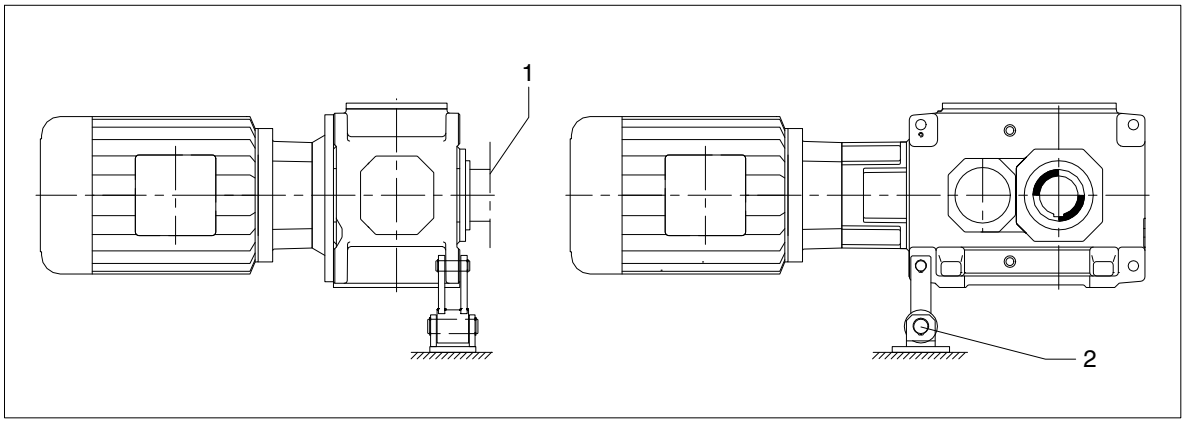

Fig. 60: Torque arm for gear-unit housing

1 Machine side

2 Flexible support block

Table 22: Motor types and torque arms

Gear-unit size	Max. perm. standard-motor size					
	Gear type			Gear type		
	H2	H3	H4	B2	B3	B4
4	200	-	-	200	200	-
5 ... 6	225	225	-	225	225	160
7 ... 8	280	280	180	280	280	200
9 ... 10	280	280	225	280	280	225
11 ... 12	315M	315M	250	315M	315M	280
13 ... 14	-	355	315M	355	355	315M
15 ... 16	-	355	315	-	355	355M
17 ... 18	-	355	355M	-	355	355
19 ... 22	on request					

Larger motors should be used only with the approval of Siemens.

- Foundation type for fastening the torque arm, see item 6.3.1, "Foundation".
- If the customer fits a torque arm, connection to the foundation must be by means of a flexible element.

6.12 Mounting supports for gear-unit swing bases

6.12.1 Attaching the support

STOP **The support for the gear-unit swing base must be mounted free of stress.**

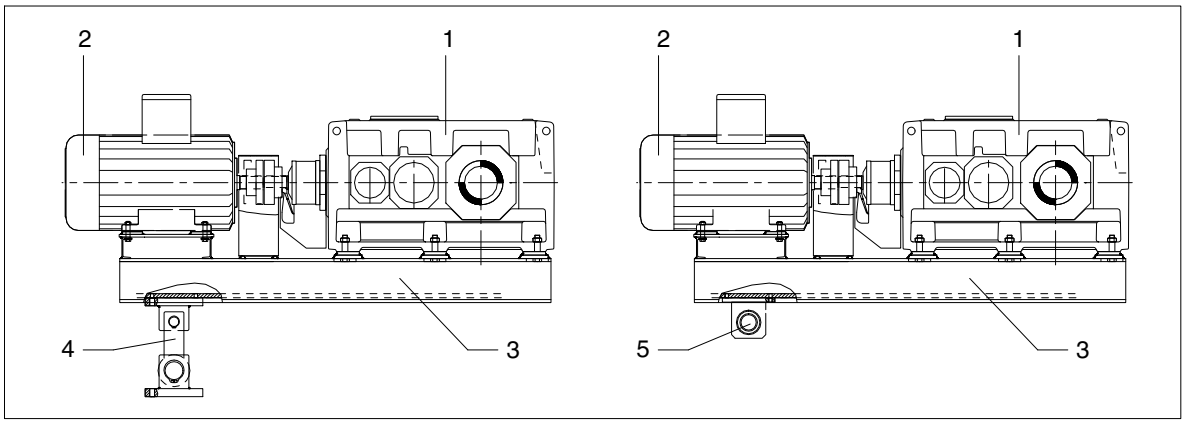

Fig. 61: Support for gear-unit swing base

1 Gear unit
2 Motor
3 Gear-unit swing base
4 Torque arm
5 Flexible support block

Table 23: Motor assignment gear-unit swing base

Gear-unit size	**Max. perm. standard-motor size** Gear type		
	B2	B3	B4
4	on request	200	-
5 ... 6		225M	160
7 ... 8		280M	200
9 ... 10		315	225M
11 ... 12		355	280S
13 ... 14		400M	315M
15 ... 16		400M	315
17 ... 18		400M	355L
19 ... 22	on request		

Larger motors should be used only with the approval of Siemens.

- Foundation type for fastening the torque arm, see item 6.3.1, "Foundation".
- If the customer fits a torque arm, connection to the foundation must be by means of a flexible element.

6.13 Gear units with cooling coil

- Before connecting the cooling coil the screw plugs must be removed from the connecting bushes.
- Flush the cooling coil (in order to remove any contamination).
- Connect the cooling-water in- and outflow pipes (for exact position of the connections, see dimensioned drawing).

☞ Observe also item 5.10.2.

6.14 Gear unit with add-on components

- For the technical data to the add-on components, as stated in item 6.15 to 6.21, refer to the order-specific list of equipment.
- The electrical equipment for regulation and control must be wired in accordance with the equipment suppliers' instructions.
- For operation and maintenance the operating instructions provided specifically for the order and the specifications in items 5.10.2 to 5.15 must be observed.

6.15 Gear units with air oil-cooler

- Connect the contamination indicator for switchover filter (for gear sizes ≥13) and pressure monitor electrically.
- Connect the fan motor electrically.

6.16 Gear units with fitted water oil-cooler

- Before connecting the water oil-cooler remove the plugs from the cooling-water connections.
- Flush the water oil-cooler (in order to remove any contamination).
- Install the cooling-water in- and outflow pipes (for flow direction and exact position of connections, see dimensioned drawing).

STOP **Make sure when installing the piping that no forces, moments or vibrations act upon the connections of the water oil-cooler.**

- Wire the pressure monitor electrically (in case of gear units with corresponding equipment only).

☞ Observe also item 5.10.4.

6.17 Gear unit with heating element

- Wire heating elements electrically.

6.18 Gear unit with oil-temperature monitoring system

- Wire resistance thermometer with evaluating instrument (to be provided by customer) electrically.

6.19 Gear unit with oil-level monitoring

- Wire the level-limit switch electrically.
- Wire oil-level monitor electrically.

6.20 Bearing-monitoring system

- The bearing monitoring device must be fitted by the customer.

6.21 Gear unit with speed transmitter

- Wire speed transmitter electrically.

6.22 Final work

- After installation of the gear unit check all screw connections for tight fit.
- Check the alignment after tightening the fastening elements (the alignment must not have been changed).
- Check that all the devices which have been demounted for transport reasons have been refitted. For this refer to the details in the data sheet, the list of equipment and the associated drawings.
- Any oil-drain cocks must be secured against accidental opening.
- The gear unit must be protected against falling objects.
- Protective devices for rotating parts must be checked for correct seating. Contact with rotating parts is not permitted.
- A potential equalisation in accordance with the applying regulations and directives must be carried out! If no threaded holes for earth connection are available on the gear unit, other appropriate measures must be taken. This work must always be done by electrotechnical specialists.
- Cable entries should be protected against moisture.
- Check that protective measures have been taken!

6.23 Screw-connection classes, tightening torques and initial tensioning forces

6.23.1 Screw-connection classes

The specified screw connections are to be fastened applying the tightening torques specified in the table below.

Table 24: Screw-connection classes

Screw-connection class	**Distribution of emitted torque on the tool**	**Tightening procedure** (Usually the tightening processes lie within the stated tool distribution)
C	± 5 % up to ± 10 %	- Hydraulic tightening with mechanical screwdriver - Torque-controlled tightening with torque wrench, signal-emitting torque wrench - Tightening with precision mechanical screwdriver with dynamic torque measuring
D	± 10 % up to ± 20 %	- Torque-controlled tightening with mechanical screwdriver
E	± 20 % up to ± 50 %	- Tightening with pulse screwdriver or impact wrench without adjustment checking device - Tightening by hand, using a spanner without torque measuring device

6.23.2 Tightening torques and initial tensioning forces

☞ The tightening torques apply to friction coefficients of μ_{total} = 0.14.
The friction coefficient μ_{total} = 0.14 applies here to lightly oiled steel bolts, black-annealed or phospatised and dry, cut mating threads in steel or cast iron. Lubricants which alter the friction coefficient must not be used and may overload the screw connection.

Table 25: Initial tensioning forces and tightening torques for screw connections of strength classes **8.8; 10.9; 12.9** with a common friction coefficient of $\boldsymbol{\mu_{total}}$ **= 0.14**

Nominal thread diameter	Strength class of the screw	Initial tensioning force for screw-connection classes from table 22			Tightening torque for screw-connection classes from table 22		
		C	D	E	C	D	E
d mm		$F_{M\ min.}$ N			M_A Nm		
M10	8.8	18000	11500	7200	44.6	38.4	34.3
	10.9	26400	16900	10600	65.4	56.4	50.4
	12.9	30900	19800	12400	76.5	66.0	58.9
M12	8.8	26300	16800	10500	76.7	66.1	59.0
	10.9	38600	24700	15400	113	97.1	86.6
	12.9	45100	28900	18100	132	114	101
M16	8.8	49300	31600	19800	186	160	143
	10.9	72500	46400	29000	273	235	210
	12.9	85000	54400	34000	320	276	246
M20	8.8	77000	49200	30800	364	313	280
	10.9	110000	70400	44000	520	450	400
	12.9	129000	82400	51500	609	525	468
M24	8.8	109000	69600	43500	614	530	470
	10.9	155000	99200	62000	875	755	675
	12.9	181000	116000	72500	1020	880	790
M30	8.8	170000	109000	68000	1210	1040	930
	10.9	243000	155000	97000	1720	1480	1330
	12.9	284000	182000	114000	2010	1740	1550
M36	8.8	246000	157000	98300	2080	1790	1600
	10.9	350000	224000	140000	2960	2550	2280
	12.9	409000	262000	164000	3460	2980	2670
M42	8.8	331000	212000	132000	3260	2810	2510
	10.9	471000	301000	188000	4640	4000	3750
	12.9	551000	352000	220000	5430	4680	4180
M48	8.8	421000	269000	168000	4750	4090	3650
	10.9	599000	383000	240000	6760	5820	5200
	12.9	700000	448000	280000	7900	6810	6080
M56	8.8	568000	363000	227000	7430	6400	5710
	10.9	806000	516000	323000	10500	9090	8120
	12.9	944000	604000	378000	12300	10600	9500
M64	8.8	744000	476000	298000	11000	9480	8460
	10.9	1060000	676000	423000	15600	13500	12000
	12.9	1240000	792000	495000	18300	15800	14100
M72x6	8.8	944000	604000	378000	15500	13400	11900
	10.9	1340000	856000	535000	22000	18900	16900
	12.9	1570000	1000000	628000	25800	22200	19800

Nominal thread diameter d mm	Strength class of the screw	Initial tensioning force for screw-connection classes from table 22 $F_{M\ min.}$ N			Tightening torque for screw-connection classes from table 22 M_A Nm		
		C	D	E	C	D	E
M80x6	8.8	1190000	760000	475000	21500	18500	16500
	10.9	1690000	1100000	675000	30500	26400	23400
	12.9	1980000	1360000	790000	35700	31400	27400
M90x6	8.8	1510000	968000	605000	30600	26300	23500
	10.9	2150000	1380000	860000	43500	37500	33400
	12.9	2520000	1600000	1010000	51000	43800	39200
M100x6	8.8	1880000	1200000	750000	42100	36200	32300
	10.9	2670000	1710000	1070000	60000	51600	46100
	12.9	3130000	2000000	1250000	70000	60400	53900

Damaged bolts must be replaced with new bolts of the same type and strength class.

7. Start-up

Observe the instructions in section 3., "Safety instructions"!

The gear unit must not be started up if the required instructions are not to hand.

7.1 Procedure before start-up

7.1.1 Removal of preservative agent

The location of the oil-draining points is marked by an appropriate symbol in the dimensioned drawing in the gear-unit documentation.

Oil-draining point:

- Place suitable containers under the oil-draining points.
- Unscrew the oil-drain plug or open the oil-drain cock.
- Remove remaining preservative agent and/or running-in oil from the gear unit using a suitable container, unscrew any existing residual-oil drain plugs, to do so.
- Dispose of remaining preservative agent and/or running-in oil in accordance with regulations.

Remove any oil spillage immediately with an oil-binding agent.
The oil must not come into contact with the skin (e.g. the operator's hands).
The safety notes on the data sheets for the oil used must be observed here!

- Screw in oil-drain plug or reclose oil-drain cock.
- Screw in any unscrewed residual-oil drain plugs again.

A detailed view of the gear unit can be obtained from the drawings in the gear-unit documentation.

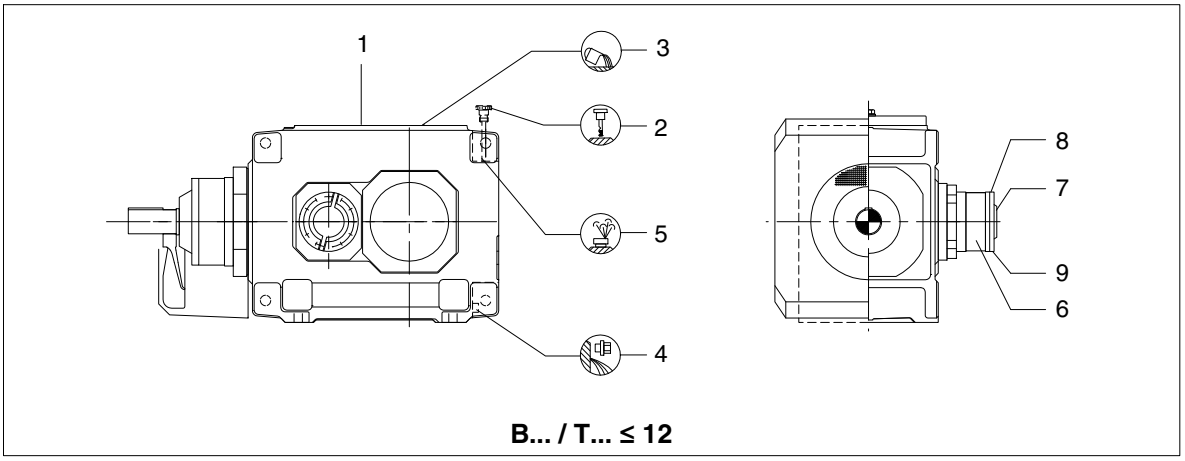

Fig. 62: Oil inlet / oil drain on gear unit

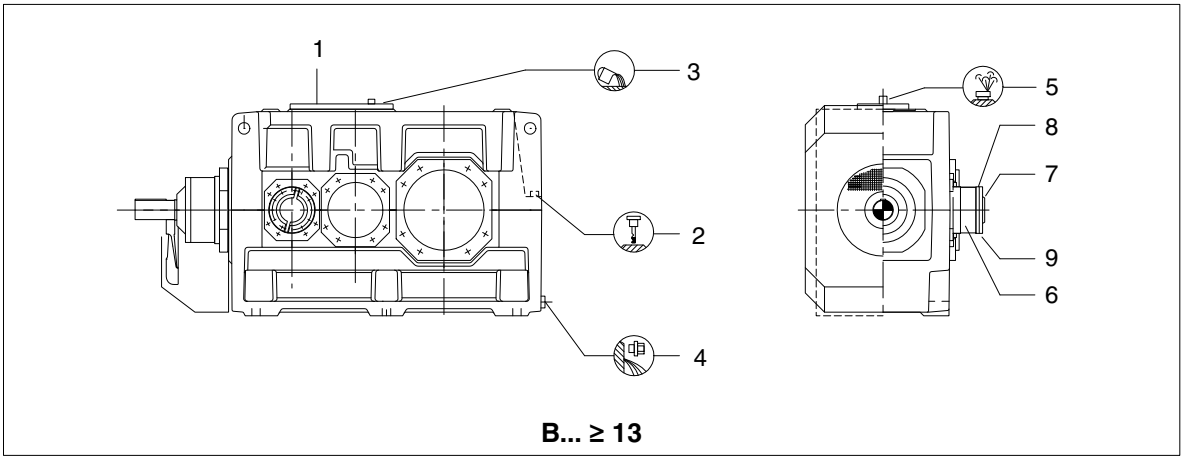

Fig. 63: Oil inlet / oil drain on gear unit

1 Inspection and/or assembly cover
2 Oil dipstick
3 Oil inlet
4 Oil-drain plug
5 Breather screw or screw plug
6 Backstop
7 Cover for backstop
8 Screw plug for oil inlet backstop
9 Screw plug for residual-oil drainage backstop

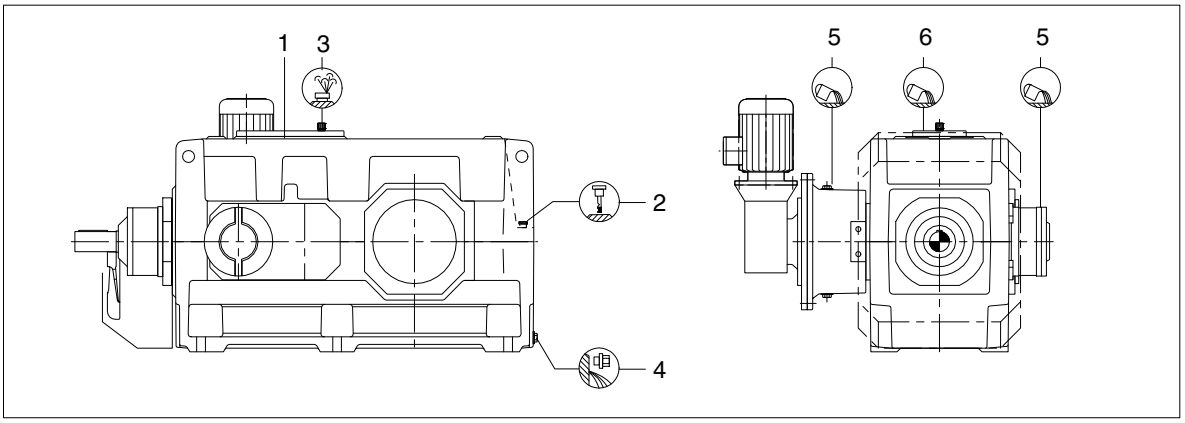

Fig. 64: Oil inlet / oil drain on gear units type B3.. ≥ 13 with auxiliary drive

1 Inspection and/or assembly cover
2 Oil dipstick
3 Breather screw or screw plug
4 Oil-drain plug
5 Oil-filler plug
6 Oil inlet

A detailed view of the gear unit can be obtained from the drawings in the gear-unit documentation.

7.1.2 Filling with lubricant

- Undo and remove fixing screws on the inspection and/or assembly cover.
- Remove cover with seal from housing (seal will be used again).

STOP **Using a filter (max. mesh 25 µm), fill the gear unit with fresh oil up to the MAX mark on the oil dipstick or the middle of the oil-sight glass.**
Remember to fill the oil pockets above the bearings and (with bevel-gear units) at the input shaft on the inside.

- In the case of gear units with add-on backstop, release the screw plug on the backstop cover and pour in approx. 0.5 l fresh oil of the total oil quantity via a filter (max. filter mesh 25 µm).
- Screw in the screw plug.

STOP **The sealing surfaces must not be contaminated nor damaged.**

For the correct type of oil (of various brands) to be used, refer to the BA 7300 EN operating instructions supplied separately.
Information on the type, quantity and viscosity of the oil is given on the rating plate on the gear unit.
The quantity of oil indicated on the rating plate is an approximation only. The marks on the dipstick or oil sight glass are decisive for the amount of oil to be filled in.

In the case of gear units fitted with pressure lubrication or an oil-cooling system, the oil circuit must also be charged with oil. To do this, briefly start up the gear unit with add-on pump (observing the description in section 8).

- Check the oil level in the gear-unit housing with the oil dipstick or by means of the oil-sight glass.

The oil level must be at the upper mark on the oil dipstick or the middle of the oil-sight glass.

Remove any oil spillage immediately with an oil-binding agent.

- Place inspection or assembly cover including seal on the housing.
- Place the fastening bolts of the cover and tighten them to the specified torque (see item 6.23).

7.1.2.1 Oil quantities

Table 26: Approximate figures for required oil quantities in horizontal gear units **with radial shaft seals and Taconite seals**

Type	Oil quantity (approximate value) in litres for size										
	1	**2**	**3**	**4**	**5**	**6**	**7**	**8**	**9**	**10**	**11**
H1SH	2.5	-	7	-	22	-	42	-	68	-	120
H2.H	-	-	-	10	15	16	27	30	42	45	71
H2.M	-	-	-	-	-	-	-	-	-	-	-
H3.H	-	-	-	-	15	17	28	30	45	46	85
H3.M	-	-	-	-	-	-	-	-	-	-	-
H4.H	-	-	-	-	-	-	25	27	48	50	80
H4.M	-	-	-	-	-	-	-	-	-	-	-
B2.H	3.5	8	-	10	16	19	31	34	48	50	80
B2.M	-	-	-	-	-	-	-	-	-	-	-
B3.H	-	-	-	9	14	15	25	28	40	42	66
B3.M	-	-	-	-	-	-	-	-	-	-	-
B4.H	-	-	-	-	16	18	30	33	48	50	80
B4.M	-	-	-	-	-	-	-	-	-	-	-

Type	Oil quantity (approximate value) in litres for size										
	12	**13**	**14**	**15**	**16**	**17**	**18**	**19**	**20**	**21**	**22**
H1SH	-	175	-	190	-	270	-	390	-	-	-
H2.H	76	135	140	210	215	290	300	320	340	320	340
H2.M	-	110	115	160	165	230	240	300	320	350	370
H3.H	90	160	165	235	245	305	315	420	450	470	490
H3.M	-	125	130	190	195	240	250	390	415	515	540
H4.H	87	130	140	230	235	290	305	360	380	395	420
H4.M	-	120	125	170	175	225	230	310	330	430	450
B2.H	95	140	155	220	230	320	335	-	-	-	-
B2.M	-	120	130	180	190	260	275	-	-	-	-
B3.H	72	130	140	210	220	290	300	380	440	370	430
B3.M	-	110	115	160	165	230	235	360	420	420	490
B4.H	90	145	150	230	235	295	305	480	550	540	620
B4.M	-	120	125	170	175	230	235	440	510	590	680

Table 27: Approximate values for required oil quantities in horizontal gear units **with labyrinth seals**

Type	Oil quantity (approximate value) in litres for size																			
	3	**4**	**5**	**6**	**7**	**8**	**9**	**10**	**11**	**12**	**13**	**14**	**15**	**16**	**17**	**18**	**19**	**20**	**21**	**22**
H1SH	5.5	-	19	-	36	-	60	-	106	-	155	-	156	-	225	-	-	-	-	-
H2SH	4.5	7	11	12	21	23	33	34	58	60	120	130	190	200	260	270	-	-	-	-
H2PH	-	-	25	-	45	-	72	-	110	-	-	-	-	-	-	-	-	-	-	-

Table 28: Approximative values for additional oil quantities for the **intermediate flange** when adding on the auxiliary drive to the main gear unit

Type	Additional oil quantity (approximate value) in litres for size								
	4	**5**	**6**	**7**	**8**	**9**	**10**	**11**	**12**
B3.H **T3.H**	1	2	2	5	5	5	6	12	12

Type	Additional oil quantity (approximate value) in litres for size									
	13	**14**	**15**	**16**	**17**	**18**	**19**	**20**	**21**	**22**
B3.H	15	15	20	20	25	25	40	40	60	60

☞ For details regarding the auxiliary gear unit, see the Special operating instructions.
(The auxiliary gear unit is delivered ex works with oil filling.)

7.2 Start-up

STOP **Before start-up, replace the yellow plastic screw plug with the air filter (see notice on gear unit).**

7.2.1 Oil level

The oil level must be monitored by means of the existing oil-level monitoring equipment. To do so, the gear unit must be shut down.

When the oil is cool, the level should be at the upper mark on the oil dipstick or the middle of oil-sight glass. When the oil is warm it may slightly exceed these marks.

STOP **It must in no case be allowed to fall below the mark. If necessary, top up to the correct level.**

7.2.2 Gear unit with cooling coil or external oil-supply system

☞ The permissible pressure and temperature values specified in the data sheet and/or list of equipment must not be exceeded.
This is to be checked before the start-up.

- Fully open the stop valves in the coolant in- and outflow pipes of the cooling system.
- Check that connecting lines are correctly fastened and tight.

☞ For connecting dimensions, refer to the dimensioned drawing of the gear unit. The required cooling water quantity and the max. permissible inlet temperature are given on the data sheet and/or the list of equipment.

7.2.3 Gear unit with backstop

☞ Observe details at item 5.8, "Backstop"!

Before start-up, check whether the backstop can be turned manually in the free-wheeling direction without exerting undue force. Observe the direction-of-rotation arrows on the housing.

STOP **To avoid damaging the backstop or the gear unit, the motor must not be run adversely to the stop direction of the gear unit.**
Observe the notice fixed to the gear unit.
The minimum lift-off speeds must not be exceeded during operation.

STOP **If a backstop with release mechanism is used, the operating instructions for this backstop must be followed.**
Moreover, the dimension "$x_{min.}$" must be checked; "$x_{min.}$" must not be smaller than that stated on the backstop rating plate.

Before connecting the motor, determine the direction of rotation of the three-phase current supply using a phase-sequence indicator, and connect the motor in accordance with the pre-determined direction of rotation.

STOP **The unit can be started up once the amount of oil indicated on the notice has been poured in through the oil filler plug screw of the backstop. Always use oil of the same type and viscosity as for the gear unit.**

7.2.4 Gear unit with overrunning clutch

☞ Observe details at item 5.16.3, "Overrunning clutch"!

Before start-up, check whether the overrunning clutch can be turned manually in the free-wheeling direction without exerting undue force. Observe the direction-of-rotation arrows on the housing.

☞ The overrunning clutch is in free-wheeling operation if the motor shaft of the auxiliary drive is rotated in opposed operating direction of rotation.
When rotating in the operating direction of rotation, the blocking action of the overrunning clutch (carrier operation) becomes effective. Coupling and, thus, rotation of the output shaft of the main gear unit in operating direction of rotation takes place.
In the case of auxiliary drives designed for load operation, the brake at the auxiliary motor must first be lifted in order to check for proper functioning of the overrunning clutch.

The overrunning clutch is accommodated within the intermediate flange and is supplied with oil from the main gear unit.

7.2.5 Temperature measurement

STOP **During first start-up and after maintenance work, the oil sump temperature must be measured during correct use (maximum machine performance) after appropriate running in.**

The maximally permissible oil-sump temperature is 90 °C (for mineral oil) or 100 °C (for synthetic oil).

At higher temperatures the gear unit must be shut down immediately and Siemens customer service consulted.

7.2.6 Oil-level monitoring system

This monitoring is designed as a standstill monitoring (gear-unit stop) and checks the level of the oil before the unit is started up. When the signal "oil level too low" is given, it should be wired in such a way that the drive motor cannot start and an alarm is given. During operation, any active signal should be bridged.

7.2.7 Bearing monitoring (vibration measurement)

If the necessary measures have been made for vibration measurement as bearing monitoring (see item 5.14), vibration measurements must be taken in order to obtain initial values and/or standard values for the diagnosis. These measurements must be recorded and filed.

7.2.8 Heating

Never switch the heating on, unless complete immersion of the rod heater in the oil bath is ensured. Fire hazard!
If heating elements are installed afterwards the maximum heating capacity (see table 14 in item 5.11) on the outer surface of the heating element must not be exceeded.

The correct setting of the switch points must be checked!

7.2.9 Checking procedure

The following visual checks must be conducted and recorded when starting up:

- ☐ Oil level
- ☐ Leaktightness of the oil-cooling or oil-supply lines
- ☐ Opening condition of the shut-off valves
- ☐ Effectiveness of the shaft seals
- ☐ Freedom of the rotating parts from contact

The tension pressures and/or pretensioning forces in accordance with item 6.3.2.4 must also be recorded in this document.

The document must be kept with the instructions.

7.3 Removal from service

- To take the gear unit out of service, first switch off the drive unit.

Secure the drive unit to prevent it from being started up unintentionally.
Attach a warning notice to the start switch!

- In the case of gear units fitted with cooling coil or water oil-coolers, close the stop valves on the water in- and outflow pipes. To prevent freezing, drain the water from the cooling coil or the water oil-cooler.
- Start the gear unit and allow it to run briefly (5 to 10 minutes) approx. every 3 weeks (during a shut-down period no longer than 6 months).
- Treat the gear unit with preservative, see items 7.3.1 and 7.3.2 (before a shut-down period exceeding 6 months).

7.3.1 Interior preservation during longer disuse

Depending on the type of lubrication and/or shaft sealing, the following types of interior preservation can be applied.

7.3.1.1 Interior preservation with gear oil

Gear units with splash-lubrication systems and contacting shaft seals can be filled with the correct type of service oil up to a point just below the air filter.

7.3.1.2 Interior preservation with preservative agent

Before longer shut-down periods gear units with pressure lubrication systems, oil circulation cooling and/or non-contacting shaft seals should be filled with preservative agent and run without load.

7.3.1.3 Interior-preservation procedure

- Stop the gear unit.
- Drain oil into a suitable container (see section 10., "Maintenance and Repair").
- Unscrew the air filter including the reducing screw.
- Pour in the preservative agent through the hole of the reducing screw up to the top mark on the oil-sight glass.

☞ For preservative agent see table 8 or 9 in item 4.4.1!

- Screw in air filter including reducing screw.
- Start the gear unit and allow it to idle briefly.
- Unscrew the oil-drain plug.
- Drain preservative agent into a suitable container.
- Dispose of preservative agent in accordance with regulations.

⚠ **There is a risk of scalding from the hot preservative agent draining from the gear unit. Wear protective gloves!**

- Screw in the oil-drain plug.
- Replace air filter with screw plug.

STOP **Before re-starting the gear unit, replace the screw plug with the air filter. Observe the instructions in item 7.1.1.**

7.3.2 Exterior preservation

7.3.2.1 Exterior-preservation procedure

- Clean the surfaces.

☞ For separation between the sealing lip of the shaft-sealing ring and the preservative agent, the shaft should be brushed with grease in way of the sealing lip.

- Apply preservative agent.

☞ For preservative agent see table 10 in item 4.4.2!

8. Operation

Observe the instructions in section 3., "Safety instructions", in section 9, "Faults, causes and remedy", and in section 10., "Maintenance and repair"!

8.1 General

To achieve a satisfactory and trouble-free operation of the equipment, be certain to observe the operating values specified in section 1, "Technical Data", as well as the information given in the operating instructions of the oil-supply system, if applicable.

During operation the gear unit must be monitored for:

- Operating temperature — The gear unit is designed for an operating temperature of:
  90 °C (mineral oil only)
  The maximum permitted temperature is:
  100 °C (synthetic oil only)
- Oil pressure of the oil-supply system (min. 0.5 bar)
- Changes in gear noise
- Possible oil leakage at the housing and shaft seals

8.2 Oil level

☞ To check the oil level, stop operation of the gear unit.
When the oil is warm, the oil level may slightly exceed the upper mark of the oil dipstick or the middle of the oil-sight glass. It must not be allowed to fall below the lower mark. If necessary, top up to the correct level.

☞ The oil level in the oil-supply system must be checked.
For this, the operating instructions of the oil-supply system must be observed!

8.3 Irregularities

STOP

The drive unit must be switched off at once,

– if irregularities are found during the operation

or

– if the pressure-monitoring device in the oil-cooling system triggers alarm (only with correspondingly equipped gear units).

Determine the cause of the fault, using table 29, "Faults, causes and remedy" (see item 9.2).

Table 29, "Faults, causes and remedies", contains a list of possible faults, their causes and suggested remedies.

If the cause cannot be found, a specialist from one of our customer-service centres should be called in (see section 2).

9. Faults, causes and remedy

Observe the instructions in section 3., "Safety instructions", and in section 10., "Maintenance and repair"!

9.1 General information on faults and malfunctions

Faults and malfunctions occurring during the guarantee period and requiring repair work on the gear unit must be carried out only by Siemens customer service.
In the case of faults and malfunctions occurring after the guarantee period and whose cause cannot be precisely identified, we advise our customers to contact our customer service.

Siemens will not be bound by the terms of the guarantee or otherwise be responsible in cases of improper use of the gear unit, modifications carried out without the agreement of Siemens or use of spare parts not supplied by Siemens.

To remedy faults and malfunctions, the gear unit must always be taken out of service. Secure the drive unit to prevent it from being started up unintentionally.
Attach a warning notice to the start switch!

9.2 Possible faults

Table 29: Faults, causes and remedy

Faults	Causes	Remedy
Changes in gear-unit noise.	Damage to gear teeth.	Contact Customer Service. Check all toothed components and replace any damaged parts.
	Excessive bearing play.	Contact Customer Service. Adjust bearing backlash.
	Bearing defective.	Contact Customer Service. Replace defective bearings.
Loud noises in the area of the gear-unit fastening.	Gear-unit fastening has worked loose.	Tighten bolts / nuts to specified torque. Replace damaged bolts / nuts.
Increased temperature at the bearing points.	Oil level in gear-unit housing too low or too high.	Check oil level at room temperature and, if necessary, top up oil.
	Oil too old.	Check date of last oil change and, if necessary, change oil. See section 10.
	Oil-supply system defective.	Check the oil-supply system, replace any defective parts. Consult operating instructions for oil-supply system.
	Bearing defective.	Contact Customer Service. Check and, if necessary, replace bearings.
Exterior of gear unit is oiled up.	Inadequate sealing of housing covers and/or joints.	Seal joints.

Faults	Causes	Remedy
Oil leakage from the gear unit.	Inadequate sealing of housing covers and/or joints. Radial shaft-sealing rings defective.	Check and, if necessary, replace sealings. Seal joints. Check radial shaft-sealing rings and, if necessary, replace.
Oil foaming in the gear unit.	Preservation agent not completely drained. Oil-supply system has been operated too long at low temperatures. Gear unit too cold in operation. Water in oil. Oil too old (defoaming agent used up). Unsuitable oils mixed up	Oil change. Stop oil-supply system. Allow the oil to degas. Shut down gear unit and have oil degassed. Restart without cooling water. Test the oil, change oil if necessary. Test the oil, change oil if necessary. Test the oil, change oil, if necessary.
Water in oil.	Oil foams in sump. Defective oil-supply unit or cooling coil. Gear unit exposed to cold air from machine-room ventilator: Water condensing. Climatic conditions.	Check state of oil by the test-tube method for water contamination. Have oil analysed by laboratory. Check the oil-supply system or cooling coil, replace any defective parts. Consult operating instructions for oil-supply system. Protect gear unit with suitable heat insulation. Close air outlet or alter its direction by structural measures. Contact Customer Service. If necessary, fit wet-air filter.
Increased operating temperature.	Oil level in housing too high. Oil too old. Oil badly contaminated. Defective oil-supply unit or cooling coil.	Check oil level and, if necessary, adjust. Check date of last oil change and, if necessary, change oil. See section 10. Change oil. See section 10. Check the oil-supply system or cooling coil, replace any defective parts. Consult operating instructions for oil-supply system.
Fault in oil-supply system.		Consult operating instructions for oil-supply system.

10. Maintenance and repair

Observe the instructions in section 3., "Safety instructions", and in section 9, "Faults, causes and remedy"!

10.1 General notes on maintenance

All maintenance and repair work must be done with care and by duly trained and qualified personnel only.

The following applies to all work in item 10.2:

Switch the gear unit and add-on components off.

Secure the drive unit to prevent it from being started up unintentionally.
Attach a warning notice to the start switch!

The periods indicated in table 30 depend on the conditions under which the gear unit is operated. Only average periods can therefore be stated here. These refer to:

a daily operating time of	**24**	**h**
a duty factor "ED" of	**100**	**%**
an input-drive speed of	**1500**	**1/min**
a maximum oil temperature of	**90**	**°C (mineral oil only)**
	100	**°C (synthetic oil only)**

The operator must ensure that the intervals stated in table 30 are adhered to. This also applies if the maintenance work is included in the operator's internal maintenance schedules.

Table 30: Maintenance and repair work

Measures	Periods	Remarks
Check oil temperature	Daily	
Check for unusual gear-unit noise	Daily	
Check oil level	Monthly	
Check gear unit for leaks	Monthly	
Test the water content of the oil	Approx. 400 operating hours,at least once per year	see item 10.2.1
Perform the first oil change	Approx. 400 operating hours after start-up	see item 10.2.2
Perform subsequent oil changes	Every 24 months or 10 000 operating hours	see item 10.2.2
Clean air filter	Every 3 months	see item 10.2.3
Clean fan and gear unit	Depending on requirements, at least every 2 years	See item 10.2.4
Refill Taconite seals with grease	Every 3000 operating hours or at least every 6 months	see item 10.2.5
Refill Tacolab seals with grease	Every 3000 operating hours or at least every 6 months	see item 10.2.6
Check hose lines	Yearly	see item 10.2.10

Measures	Periods	Remarks
Change the hose lines	6 years from the manufacturing date impressed	see item 10.2.10
Check cooling coil	Every 2 years	see item 10.2.7
Check friction linings of torque-limiting backstop	Once per year at least	see item 5.9
Check auxiliary drive		see item 5.16
Check tightness of fastening bolts	After first oil change, then every 2 years	see item 10.2.14
Check shrink disk	Every 12 months	see item 6.7.5
Inspection of the gear unit	Approx. every 2 years	see item 10.4

10.1.1 General oil-service lives

According to the manufacturers, the following are the expected periods during which the oils can be used without undergoing any significant change in quality. They are calculated on the basis of an average oil temperature of 80 °C:

– for mineral oils, biologically degradable oils and physiologically safe (synthetic esters) oils 2 years or 10 000 operating hours **(does not apply to natural esters such as rape seed oils)**.

– for poly-α-olefins and polyglycols: 4 years or 20 000 operating hours.

☞ The actual service lives may differ. The general rule is that an increase in temperature of 10 K will halve the service life and a temperature decrease of 10 K will approximately double the service life.

10.2 Description of maintenance and repair work

10.2.1 Test water content of oil

More information about examining the oil for water content or conducting oil analyses is obtainable from your lubricant manufacturer or our customer service.

- For reference purposes, a fresh sample of the operating lubricating oil used must be sent with the used oil sample to the analysing institute for analysis.
- The oil sample must be taken downstream of the filter of the oil-supply system while the gear unit is running. A suitable connection point is normally located upstream of the gear unit input (e.g. oil-drain cock in the pressure line).
- A special sample container should be filled with the specified quantity of oil.
  If there is no such sample container available, at least one litre of oil must be put in a **clean**, transportworthy, sealable vessel.

10.2.2 Change oil

As an alternative to the oil-change intervals indicated in table 30 (see item 10.1) it is possible to have the oil sample tested at regular intervals by the Technical Service of the relevant oil company and to have it released for further use.

If re-usability has been confirmed, no oil change will be necessary.

☞ Please observe the separately attached operating instructions BA 7300 EN.

- The instructions in item 7.1 must be observed!
- Drain the oil while the gear unit is still warm, i.e. immediately after shutting down the machinery.

When changing the oil, always re-fill the gear unit with the same type of oil. Never mix different types of oil and/or oils made by different manufacturers. Polyglycol-based synthetic oils in particular must not be mixed with PAO-based synthetic or mineral oils. If changing to a different grade or make of oil, the gear unit must, if necessary, be flushed out with the new oil grade. Flushing is not necessary, if the new service oil is fully compatible with the old service oil in all respects. Compatibility must be confirmed by the oil supplier. If there is a change to another oil grade or make, Siemens recommends flushing out the gear unit with the new grade of service oil.

When changing the oil, the housing and the oil-supply system, if available, must be flushed with oil to remove sludge, metal particles and oil residue. Use the same type of oil as is used for normal operation. High-viscosity oils must be heated beforehand using suitable means. Ensure that all residues have been removed before filling with fresh oil.

- Place a suitable container under the oil-draining point of the gear-unit housing.
- Unscrew the air filter including reducing screw at the housing top.
- Unscrew oil-drain plug or open oil-drain cock and drain the oil into the collecting container.
- Drain the oil from the oil-supply system (see operating instructions to the oil-supply system).

There is a danger of scalding from the hot oil emerging from the housing.
Wear protective gloves!
Remove any oil spillage immediately with an oil-binding agent.

Check the condition of the sealing ring (the sealing ring is vulcanised onto the oil-drain plug). If necessary, use a new oil-drain plug.

- Screw in the oil-drain plug or close oil-drain cock.
- Clean the oil filter in the oil-cooling system (see operating instructions of the oil-supply system).
- Clean the air filter (see item 10.2.3).
- Screw in air filter including reducing screw.
- Fill fresh oil into the gear unit (see item 7.1.2).

10.2.3 Clean the air filter

If a layer of dust has built up, the air filter must be cleaned, whether or not the minimum period of 3 months has expired.

- Unscrew the air filter including the reducing screw.
- Clean the air filter using benzine or a similar cleanser.
- Dry the air filter and/or blow with compressed air.

Be especially careful when blowing with compressed air.
Wear protective glasses!

STOP **Foreign bodies must be prevented from entering the gear unit.**

10.2.4 Clean the fan and gear unit

- The instructions in item 5.10.1 must be observed!
- Remove the fan cowl.
- Using a stiff brush, remove any dirt adhering to the fan wheel, fan cowl and safety grid.
- Remove any corrosion.
- Screw safety grid back onto the fan cowl.

The gear unit must not be cleaned with high-pressure cleaning equipment.

It must be ensured that the fan cowl is correctly fastened. The fan must not come into contact with the fan cowl.

10.2.5 Refill Taconite seals with grease

- Inject approx. 30 g lithium-based bearing grease into each of the lubrication points of the Taconite seal. The lubrication points are fitted with flat grease nipples type AM10x1 to DIN 3404.

Remove and dispose of any old grease escaping.

10.2.6 Refill Tacolab seals with grease

- Inject approx. 30 g lithium-based bearing grease into each of the lubrication points of the Tacolab seal. The lubrication points are fitted with flat grease nipples type AM10x1 to DIN 3404.

Remove and dispose of any old grease escaping.

10.2.7 Check cooling coil

- Shut off the cooling-water supply.
- Disconnect the cooling-water in- and outflow pipes from the cooling coil.
- Check the inside walls of the cooling coil for deposits.

If the cooling coil is dirty, heat is no longer withdrawn effectively from the gear unit. Any dirt adhering to the inside of the coil should be removed by chemical cleaning or the cooling coil should be replaced with a new one.

- If thick deposits have formed on the inside of the cooling coil, the cooling water and/or the deposits themselves should be chemically analysed. These analyses are carried out by companies which specialise in chemical cleaning. They also supply the special cleaning agents required.
- Before using these cleaning agents, ensure that they will not damage the coil materials (contact Siemens). Observe the manufacturer's instructions at all times when using different cleaning agents by several manufacturers.

Avoid burns when working with corrosive cleaning agents. Always observe the manufacturers' instructions for safety and use.

Wear personal protective equipment (gloves, safety glasses)!

- Seriously contaminated cooling coils must be replaced. Consult our Customer Service.
- Re-connect the water in- and outflow pipes.

10.2.8 Check air oil-cooler

- The instructions in items 5.10.3, 7.1.2 and 10.1 must be observed!
- Close the stop valves in the coolant in- and outflow pipes.
- Remove dirt from the cooler block.
- Check the condition of screw connections and, if necessary, replace.

10.2.9 Check water oil-cooler

- The instructions in items 5.10.4, 7.1.2 and 10.1 must be observed!
- Close the stop valves in the coolant in- and outflow pipes.
- Inspect cooler for leaks in the piping.
- Check the condition of screw connections and, if necessary, replace.

10.2.10 Check hose lines

Even when adequately stored and subjected to permissible loads, hoses and hose lines are subject to a natural ageing process. This limits their period of use.

STOP **The period of use of the hose lines must not exceed 6 years from the manufacturing date stamped on them.**

The period of use can be determined using available test and empirical values, taking into account the conditions of use.

☞ The operator of the system must ensure that hose lines are replaced at suitable intervals of time, even if no defects which may affect their safe operation are identifiable on them.

Hose lines must be inspected for safe working condition by an expert before the plant is first put into operation and thereafter at least once a year.

STOP **If during inspections faults are found, these must be rectified immediately or suitable countermeasures taken.**

10.2.11 Top up oil

- The instructions in item 7.1.2 must be observed!
- Always top up with the same type of oil as already used in the unit (see also item 10.2.2).

10.2.12 Checking friction linings of torque-limiting backstop

- The instructions in item 5.9 must be observed!

10.2.13 Checking auxiliary drive

- The instructions in item 5.16 must be observed!
- Be sure to observe the supplied operating instructions relating to the auxiliary gear unit for operation and maintenance.

10.2.14 Check tightness of fastening bolts

- The instructions in item 10.1 must be observed!
- Close the stop valves in the coolant in- and outflow pipes (gear units with cooling coil or water oil-cooling system).
- Check tightness of all fastening bolts.

☞ Damaged bolts must be replaced with new bolts of the same type and strength class.

10.3 Final work

☞ For operating and servicing the components, the pertinent instruction manuals and the specifications in sections 5 and 7 must be observed.
For technical data, refer to the data sheet and/or the list of equipment.

☞ Observe also item 6.22.

☞ Damaged bolts must be replaced with new bolts of the same type and strength class.

10.4 General inspection of the gear unit

The general inspection of the gear unit should be carried out by the Siemens Customer Service, as our engineers have the experience and training necessary to identify any components requiring replacement.

10.5 Lubricants

The quality of the oil used must meet the requirements of the separately supplied BA 7300 EN operating instructions, otherwise the guarantee given by Siemens will lapse. We urgently recommend using one of the oils listed in BA 7300 EN, because they have been tested and meet the requirements.

☞ To avoid misunderstandings, we should like to point out that this recommendation is in no way intended as a guarantee of the quality of the lubricant supplied. Each lubricant manufacturer is responsible for the quality of his own product.

Information on the type, quantity and viscosity of the oil is given on the rating plate on the gear unit or in the supplied documentation.

The quantity of oil indicated on the rating plate is an approximation only. The marks on the dipstick or oil-sight glass are decisive for the amount of oil to be filled in.

The manual containing the current lubricants recommended by Siemens can also be consulted on the Internet (see back cover).

The oils listed there are subjected to continuous tests. Under certain circumstances the oils recommended there may therefore later be removed from the range or replaced with further developed oils.

We recommend regularly checking whether the selected lubricating oil is still recommended by Siemens. If it is not, the brand of oil should be changed.

11. Spare parts, customer service

11.1 Stocking spare parts

By stocking the most important spare and wearing parts on site you can ensure that the gear unit is ready for use at any time.

To order spare parts, refer to the spare-parts list.

For further information refer to the spare-parts drawing stated in the spare parts list.

STOP

We guarantee only the original spare parts supplied by us. Non-original spare parts have not been tested or approved by us. They may alter technical characteristics of the gear unit, thereby posing an active or passive risk to safety. Siemens will assume no liability or guarantee for damage caused by spare parts not supplied by Siemens. The same applies to any accessories not supplied by Siemens.

Please note that certain components often have special production and supply specifications and that we supply you with spare parts which comply fully with the current state of technical development as well as current legislation.

When ordering spare parts, always state the following:

Order number, item	Type, size	Part number	Quantity

11.2 Spare parts and customer-service addresses

When ordering spare parts or requesting a service specialist, please contact Siemens first (see section 2).

12. Declarations

12.1 Declaration of incorporation

Declaration of Incorporation

in accordance with Directive 2006/42/EC, Annex II 1 B

The manufacturer, Siemens AG, 46393 Bocholt, declares with regard to the partly completed machinery,

Gear Unit
H.SH, H.VH, H.HH, H.DH, H.KH, H.FH, H.HM, H.DM, H.KM, H.FM, H.PH, B.SH, B.VH, B.HH, B.DH, B.KH, B.FH, B.HM, B.DM, B.KM, B.FM, T.SH, T.HH, T.KH, T.DH, T.FH
Sizes 1 to 22

developed for driven machines in general engineering applications:

- The special technical documents described in Annex VII B have been prepared.
- The following basic health and safety requirements set out in Directive 2006/42/EC, Annex I, are applied and are satisfied:
  1.1, 1.1.2, 1.1.3, 1.1.5; 1.2.6; 1.3.1 - 1.3.4, 1.3.6 - 1.3.8.1; 1.4.1, 1.4.2.1;
  1.5.1, 1.5.2, 1.5.4 - 1.5.11, 1.5.13; 1.6.1, 1.6.2; 1.7.1 - 1.7.2, 1.7.4 - 1.7.4.3
- The partly completed machinery must not be put into service until it has been established that the machinery into which the partly completed machinery is to be incorporated has been declared in conformity with the provisions of Directive 2006/42/EC, as appropriate.
- The manufacturer undertakes, in response to a reasoned request by the national authorities, to transmit in electronic form relevant information about the partly completed machinery.
- The person authorised to compile the relevant technical documentation is:
  Friedheim Schreier (Director ZGE Engineering)

Penig, 2010-06-01

Friedheim Schreier
(Director ZGE Engineering)

Penig, 2010-06-01

Hans-Hermann Olm
(Director ZG Business Subsegment)

Siemens AG
Industry Sector
Mechanical Drives
Alfred-Flender-Straße 77
46395 Bocholt
GERMANY

Subject to modifications

www.siemens.com/drivetechnology